ONTARIO HOSE
SPECIALTIES LIMITED

Spécialité Boyaux Québec
Quebec Hose Specialties

Division de / of ONTARIOHOSE Specialties LTD.

Maritime Hose
Specialties

WWW.ONTARIOHOSE.COM
1-877-668-4673

MISSISSAUGA | STONEY CREEK | SARNIA | KINGSTON | QUEBEC | NOVA SCOTIA

2019

ONTARIO HOSE SPECIALTIES LIMITED

MARITIME HOSE SPECIALTIES LIMITED

QUEBEC HOSE SPECIALTIES LIMITED

2019

CERTIFICATIONS

B620 - Highway Tanks
Propane and Natural Gas

TECHNICAL STANDARDS & SAFETY AUTHORITY
TSSA

CRN
Certified Hose Assemblies

NAHAD
MEMBER
THE ASSOCIATION FOR HOSE AND ACCESSORIES DISTRIBUTION

RUBBER manufacturers association

ISO 9001:2015

Hose Testing, Tracking, Training

Please contact us for more information about our new testing, compliance and training division

---

MISSISSAUGA | STONEY CREEK | CORUNNA | KINGSTON | QUEBEC | NOVA SCOTIA

ONTARIO HOSE

Specialties Limited

Maritime Hose Specialties

MHS

Spécialité Boyaux Québec

Quebec Hose Specialties

Division de / of ONTARIOHOSE Specialties LTD.

We are a leading supplier and distributer of top quality hoses, fittings and accessories to the tank truck, petroleum, chemical, food, environmental and industrial markets.

Industrial hose is one of the most overlooked necessities of the modern economy. Virtually every industry uses some type of hose. Tanker trucks, breweries and cement plants, for example, all require hose assemblies made to tight specifications and exacting, rigorous standards. Our company has filled this market niche for many years. We also offer complete hose testing and repair services.

Founded in 1973, Ontario Hose Specialties Limited has grown from a one man operation to a well-established five-branch supplier of industrial hose and hose products, primarily in Ontario, Quebec and Eastern Canada.

From the beginning our goals are to help you achieve:

- No Spills
- No Personal Injury
- No Product Contamination

When it comes to managing your hoses, some of the most common problems in the hose industry result from improper hose and coupling selection, failure to correctly inspect and test hose assemblies, improper cleaning practices and hose assembly storage techniques.

In turn, these situations can lead to material leakage, spraying, spattering, end blow-offs, explosions and other situations that can result in serious personal injury and property damage. With proper training these situations can be avoided.

For over 40 years Ontario Hose has been fulfilling customers' needs for hose, fittings and accessories by offering solutions to achieve their goals through:

- Our Highly trained staff
- Strict adherence to quality programs ISO, CRN, B620, CSA, Nahad
- Innovative hose tracking, training and certification solutions

We look forward to serving all your requirements and achieving your business objectives.

Contents

Air & General Service	Chemical	Food	Material Handling
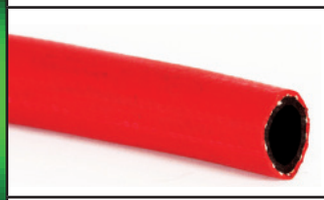			
Page 6	Page 8	Page 13	Page 17
Metal	**Teflon**	**Petroleum**	**Steam**
		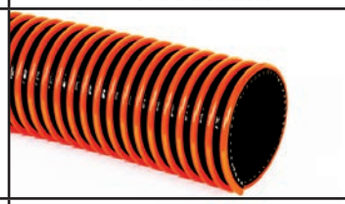	
Page 22	Page 24	Page 26	Page 34
Water Suction & Discharge	**Air Ducting**	**Hose Protection**	**Air**
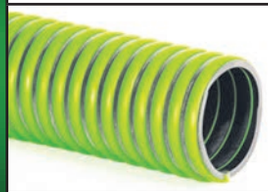	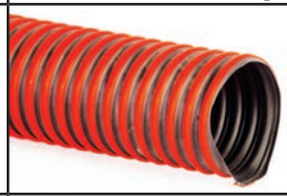		
Page 35	Page 41	Page 44	Page 45
Cam and Groove	**Steam**	**Hyrovac Parts**	**Nipples, Menders, Shanks**
Page 48	Page 86	Page 88	Page 96
Clamps	**Valves**	**Water**	**Gauges**
Page 99	Page 106	Page 108	Page 109

Hydraulic Pumps & Fittings	Betts parts	Tank Truck Equipment	Loading Equipment
Page 110	Page 112	Page 128	Page 142

Tape and Packing	Services Station Equipment	Pipe Parts	Absorbant Material
Page 145	Page 146	Page 148	Page 150

Safety Equipment	Placards & Placard Holders	Value Added Services	Index
			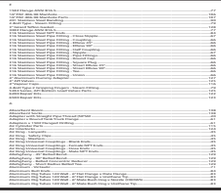
152	154	156	161

"We have a coupling and hose for everything that flows"

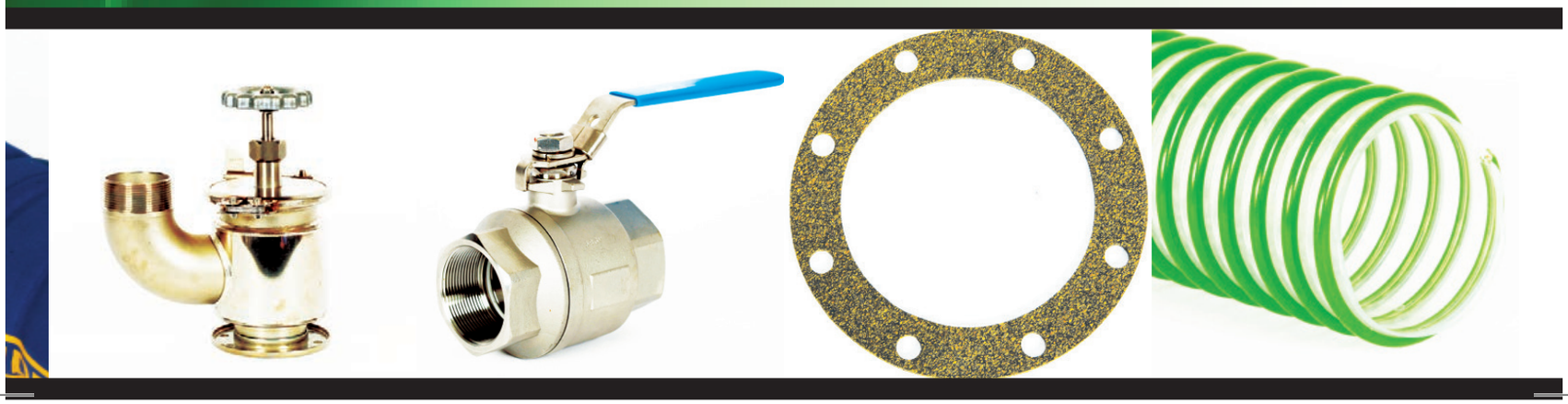

General Service Air/Water

Applications:
- Air and water applications requiring maximum flexibility
- Outstanding resistance to heat and ozone
- Limited oil resistance

Tube:
- EPDM Black

Reinforcement:
- Synthetic, high tensile textile cord

Cover:
- Red EPDM

Temp Range:
- -40-°F to +210°F

For air and water without oil mist.

Continental

Part #	I.D. (in.)	O.D. (in.)	Bend Radius (in.)	Working PSI	Weight (lbs/ft)	Standard Length
200 PSI						
HORIZR025P200	1/4	.47	3	200	.08	650
HORIZR516P200	5/16	-	-	200	-	650
HORIZR038P200	3/8	.66	3	200	.14	650
HORIZR050P200	1/2	.81	5	200	.20	650
HORIZR058P200	5/8	.93	6	200	.23	650
HORIZR075P200	3/4	1.08	6	200	.29	650
HORIZR100P200	1	1.39	8	200	.45	400
HORIZR125P200	1 1/4	-	-	200	-	-
HORIZR150P200	1 1/2	-	-	200	-	-
250 PSI						
HORIZR025P250	1/4	.47	3	250	.08	650
HORIZR038P250	3/8	.66	3	250	.14	650
HORIZR050P250	1/2	.81	5	250	.20	650
HORIZR058P250	5/8	.93	6	250	.23	650
HORIZR075P300	3/4	1.13	6	250	.34	650
300 PSI						
HORIZR025P300	1/4	.63	-	300	.14	650
HORIZR038P300	3/8	.69	-	300	.18	650
HORIZR050P300	1/2	.75	-	300	.23	650
HORIZR075P300	3/4	1.19	-	300	.40	650
HORIZR100P300	1	-	-	300	-	-

Premium Multi Purpose Air/Water

Applications:
- Ortac is a premium-quality multipurpose hose. Will handle air, oil, water, kerosene and some chemicals.
- Excellent weather and ozone resistance
- Oil Resistant

Tube:
- Nitrile Black

Reinforcement:
- Braided, high tensile synthetic textile cord

Cover:
- 19B: Red - Modified nitrile
  119B: Black - Neoprene

Temp Range:
- -40°F to +212°F

Automotive and Industrial air tools with oil mist.

Part #	I.D. (in.)	O.D. (in.)	Bend Radius (in.)	Working PSI	Weight (lbs/ft)	Standard Length
250 PSI						
ORTAC025P250	1/4	.50	3	250	.09	750
ORTAC516P250	5/16	-	-	250	-	-
ORTAC038P250	3/8	.69	3	250	.16	750
ORTAC050P250	1/2	.84	5	250	.21	750
ORTAC058P250	5/8	.94	6	250	.24	650
ORTAC075P250	3/4	1.09	6	250	.30	650
ORTAC100P250	1	1.38	8	250	.43	400
ORTAC200P250	2		-	-	250	- -
300 PSI						
ORTAC316P300	3/16	.44	3	500	.07	650
ORTAC025P300	1/4	.61	-	500	.14	-
ORTAC516P300	5/16	.68	3	500	.16	650
ORTAC038P300	3/8	.73	5	500	.18	650
ORTAC050P300	1/2	.89	6	500	.25	650
ORTAC058P300	5/8	1.06	6	500	.35	650
ORTAC075P300	3/4	1.19	8	500	.40	400
ORTAC100P300	1	1.50	-	500	.59	-
ORTAC150P300	1 1/2	2.08	-	500	.88	-
400 PSI						
ORTAC150P300	1/4	0.61	3	250	.09	-
ORTAC150P300	3/8	.73	-	250	-	-
ORTAC150P300	1/2	.89	3	250	.16	-
ORTAC150P300	3/4	1.18	5	250	.21	-
ORTAC150P300	1	1.50	6	250	.24	-

Boston Chemcat (UHMW)

Applications:
- Transfer of acids, chemicals, solvents, and petroleum
- Loading or unloading pumping, suction, or gravity flow
- Resistant to chemical, petroleum, solvent, and ozone
- Won't contaminate or discolor fluids

Tube:
- Ultra High Molecular Weight Polyethylene UHMW

Reinforcement:
- Textile, 2 ply, or 4 ply and helical wire

Cover:
- Purple EPDM

Temp Range:
- -45°F to +160°F

Part #	I.D. (in.)	O.D. (in.)	Working PSI	Bend Radius (in.)	Weight (lbs/ft)	Standard Length
CCAT075	3/4	1.20	200	4.0	.31	150
CCAT100	1	1.53	200	5.5	.55	150
CCAT125	1 1/4	1.88	200	6.0	.67	150
CCAT150	1 1/2	2.13	200	7.5	.89	150
CCAT200	2	2.63	200	8.0	1.16	150
CCAT250	2 1/2	3.13	200	8.0	1.42	150
CCAT300	3	3.63	200	9.0	1.68	150
CCAT400	4	4.67	150	15.0	2.26	150
CCAT600	6	7.00	150	30.0	7.21	150

OHS Corrugated UHMW Hose

Applications:
- Transfer of acids, chemicals, solvents, and petroleum
- Loading or unloading, pumping, suction, or gravity flow
- Resists abrasion, chemicals, and petroleums
- FDA approved material; will not contaminate or discolor fluids

Tube:
- Ultra high molecular weight polyethylene (U.H.M.W.)

Reinforcement:
- Textile, 2 ply and helical wires

Cover:
- Green Corrugated EPDM

Temp Range:
- -45°F to +220°F

Part #	I.D. (in.)	O.D. (in.)	Working PSI	Bend Radius (in.)	Weight (lbs/ft)	Standard Length
OHSUH150	1 1/2	2.13	200	4.0	.89	150
OHSUH200	2	2.63	200	5.0	1.16	150
OHSUH300	3	3.63	200	6.5	1.68	150
OHSUH400	4	4.68	150	9.5	2.26	150

Goodyear FabChem

Applications:
- This hose handles the majority of common industrial chemicals in pressure, gravity flow and suction services

Tube:
- Pliosyn UHMW

Reinforcement:
- Spiral-plied synthetic fabric with double wire helix

Cover:
- Green Versigard synthetic rubber with bright orange longitudinal stripe, corrugated (wrapped impression)

Temp Range:
- -40°F to +150°F

Part #		I.D. (in.)	O.D. (in.)	Working PSI	Bend Radius (in.)	Weight (lbs/ft)	Standard Length
GFC100	GFC100SBQ	1	1.53	200	5.0	.72	150
GFC125	GFC125SBQ	1 1/4	1.88	200	8.0	.86	100
GFC150	GFC150SBQ	1 1/2	2.13	200	8.0	.89	150
GFC200	GFC200SBQ	2	2.63	200	9.0	1.13	150
GFC300	GFC300SBQ	3	3.63	150	16.0	1.64	150
GFC400	GFC400SBQ	4	4.69	150	21.0	2.39	100

Gates Stallion

Applications:
- This hose handles the majority of common industrial chemicals in pressure, gravity flow and suction services

Tube:
- Type T (FEP) Teflon or Neoflon

Reinforcement:
- Synthetic, high tensile textile with steel wire helix

Cover:
- Type P (EPDM) Blue corrugated with red spiral stripe

Temp Range:
- -40°F to +250°F

Part #	I.D. (in.)	O.D. (in.)	Working PSI	Bend Radius (in.)	Weight (lbs/ft)	Standard Length
STAL075	3/4	1.20	200	4.0	.31	150
STAL100	1	1.53	200	5.5	.55	150
STAL125	1 1/4	1.88	200	6.0	.67	150
STAL150	1 1/2	2.13	200	7.5	.89	150
STAL200	2	2.63	200	8.0	1.16	150
STAL250	2 1/2	3.13	200	8.0	1.42	150
STAL300	3	3.63	200	9.0	1.68	150
STAL400	4	4.67	150	15.0	2.26	150
STAL600	6	7.00	150	30.0	7.21	150

Gates Mustang

Application:
- Mustang hose can be used in tank truk, barge, ship or storage tank transfers of a variety of chemical products

Tube:
- Type K Gatron Modified Crosslinked polyethylene

Cover:
- Type P (EPDM) hose. Black or green corrugated with orange spiral stripe

Reinforcement:
- Synthetic, high tensile textile with steel wire helix for full suction capability and flexibility

Temp Range:
- -40°F to +250°F

Part #	I.D. (in.)	O.D. (in.)	Working PSI	Bend Radius (in.)	Weight (lbs/ft)	Standard Length
MUST150	1 1/2	2.13	200	4.0	.89	150
MUST200	2	2.63	200	5.0	1.16	150
MUST300	3	3.63	200	6.5	1.68	150
MUST400	4	4.68	150	9.5	2.26	150

Parker BlueThunder

Application:
- This corrugated hose provides flexibility and durability in chemical full suction and discharge applications. The clear UHMW polyethylene tube will handle 98% of the most common chemicals without leaching and contaminating the product being conveyed

Tube:
- Ultra High Molecular Weight Polyethylene (UHMW)

Cover:
- Corrugated blue EPDM

Reinforcement:
- Textile Plies with Helix Wire

Temp Range:
- -40°F to +250°F

Part #	I.D. (in.)	O.D. (in.)	Working PSI	Bend Radius (in.)	Weight (lbs/ft)	Standard Length
BTH150	1 1/2	2.13	200	4.0	.89	150
BTH200	2	2.63	200	5.0	1.16	150
BTH300	3	3.63	200	6.5	1.68	150
BTH400	4	4.68	150	9.5	2.26	150

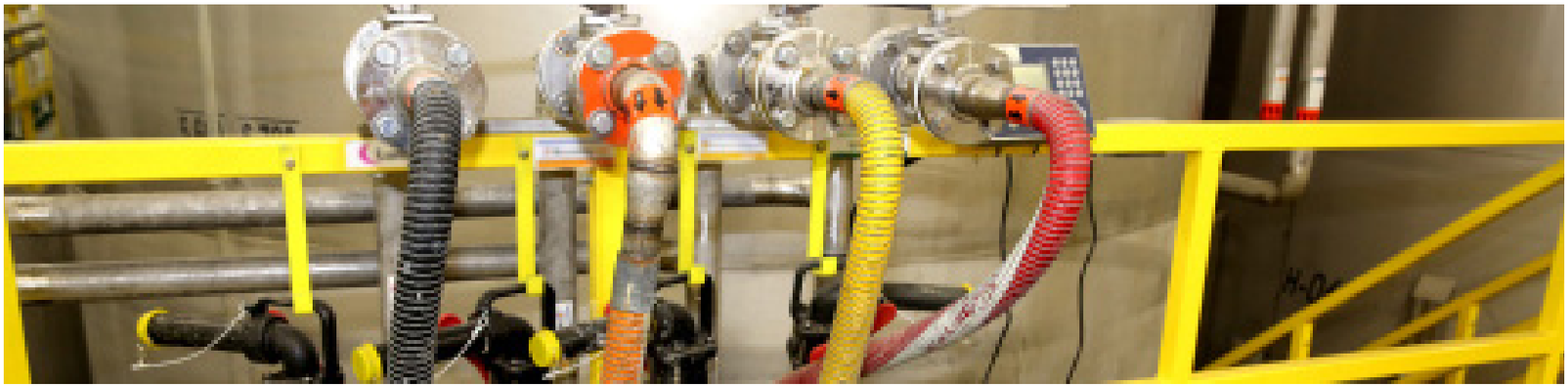

Why Choose Peraflex Composite Hose?

We've Virtually Eliminated Leaks

Every Peraflex hose is produced with an internal and external wire that supports a combination of seamless tubes, plastic films and barriers. These are reinforced with high-strength, high density material.

We're Flexible

Whether you require your hose to be extra flexible, stiff to handle higher pressures or more abrasion resistant - we have a customizable solution to meet any of your pressure, application or colour coding needs.

No Loose Ends

The right connection is as important as the right hose. That's why every Peraflex hose assembly includes a spiral hose shank that threads into the internal wire, an external crimp and a rubber seal to seal the tube ends.

PeraFlex GGP Hydro Carbon Hose

Applications:
- Transfer of hydrocarbon products; petroleum, diesel, kerosenes, fuel oils, solvents
- Rated for 100% aromatic content
- Resists abrasion, ozone, and fire w/ a 5 to 1 safety ratio

Tube:
- Seamless polypropylene tubes and film barriers

Reinforcement:
- Internal wire - galvanized
  External wire - galvanized

Cover:
- Black vinyl coated polyester

Temp Range:
- -40°F to +212°F

Part #	I.D. (in.)	O.D. (in.)	Working PSI	Bend Radius (in.)	Weight (lbs/ft)	Standard Length
GGP100	1	-	200	2.0	.65	80
GGP125	1 1/4	-	200	-	-	80
GGP150	1 1/2	-	200	3.0	1.0	80
GGP200	2	-	200	3.5	1.2	80
GGP250	2 1/2	-	200	4.0	2.0	80
GGP300	3	-	200	5.5	2.4	80
GGP400	4	-	200	6.5	3.5	80
GGP600	6	-	200	22.0	7.4	50
GGP800	8	-	200	29.0	12.5	50

PeraFlex PGP Standard Chemical Hose

Applications:
- Chemical Carriers, Ship-to-Shore Transfer, In-Plant Service, Rail Tankers
- Resists abrasion, ozone, and fire
- 5 to 1 safety ratio

Tube:
- Seamless polypropylene tubes and film barriers

Temp Range:
- -40°F to +212°F

Reinforcement:
- High-density polyethylene woven fabric with internal wires

Cover:
- Blue vinyl coated polyester

Wire:
- Internal - Polypropylene
  External - Galvanized

Part #	I.D. (in.)	O.D. (in.)	Working PSI	Bend Radius (in.)	Weight (lbs/ft)	Standard Length
PGP100	1	-	200	2.0	.65	80
PGP125	1 1/4	-	200	-	-	80
PGP150	1 1/2	-	200	3.0	1.0	80
PGP200	2	-	200	3.5	1.2	80
PGP250	2 1/2	-	200	4.0	2.0	80
PGP300	3	-	200	5.5	2.4	80
PGP400	4	-	200	6.5	3.0	80
PGP600	6	-	200	22.0	7.4	50
PGP800	8	-	200	29.0	12.5	50

PeraFlex SGT or SST Aggressive Chemical Hose

Applications:
- Transfer of aggressive chemicals and solvents
- Resists abrasion, ozone, and fire
- 5 to 1 safety ratio

Tube:
- PTFE or FEP Teflon liner supported by seamless polypropylene

Temp Range:
- -40°F to +212°F

Reinforcement:
- High-density polyethylene woven fabric with internal and external wires

Cover:
- Grey vinyl coated polyester

Wire:
- SGT: Internal - stainless steel
  External - galvanized
  SST: Internal - stainless steel
  External - stainless steel

SGT Part #	SST Part #	I.D. (in.)	Working PSI	Bend Radius (in.)	Weight (lbs/ft)	Standard Length
SGT100	SST100	1	200	2.0	.65	80
SGT125	SST125	1 1/4	200	-	-	80
SGT150	SST150	1 1/2	200	3.5	1.0	80
SGT200	SST200	2	200	4.0	1.3	80
SGT250	SST250	2 1/2	200	4.5	2.1	80
SGT300	SST300	3	200	6.0	2.5	80
SGT400	SST400	4	200	7.0	3.1	80
SGT600	SST600	6	200	22	7.9	80

PeraFlex SGP or SSP Standard Chemical Hose

Applications:
- Chemical Carriers, Ship-to-Shore Transfer, In-Plant Service, Rail Tankers
- Resists abrasion, ozone, and fire
- 5 to 1 safety ratio

Tube:
- Seamless polypropylene tubes and film barriers

Temp Range:
- -40°F to +212°F

Reinforcement:
- High-density polyethylene woven fabric with internal and external wires

Cover:
- Red vinyl coated polyester

Wire:
- SGP: Internal - stainless steel
  External - galvanized
  SSP: Internal - stainless steel
  External - stainless steel

SGP Part #	SSP Part #	I.D. (in.)	Working PSI	Bend Radius (in.)	Weight (lbs/ft)	Standard Length
SGP100	SSP100	1	200	2.0	.65	80
SGP125	SSP125	1 1/4	200	-	-	80
SGP150	SSP150	1 1/2	200	3.0	1.0	80
SGP200	SSP200	2	200	3.5	1.2	80
SGP250	SSP250	2 1/2	200	4.0	2.0	80
SGP300	SSP300	3	200	5.5	2.4	80
SGP400	SSP400	4	200	6.5	3.0	80
SGP600	SSP600	6	200	22	7.9	50

PeraFlex CGA Gas Hose - Composite

Applications:
- Specifically designed for the conveyance of liquid gases to low temperatures. With the ability to remain flexible at temperatures down to -94°F, this hose is ideally suited to handle propane, natural gas, methane, carbon dioxide, and others

Tube:
- Polyester

Reinforcement:
- Polyester fabric with galvanized steel internal and external wires

Cover:
- Polyester fabric

Temp Range:
- -94°F to +212°F

**6-7% expansion under pressure

CGA/CSA Approval:
- Hoses are supplied with a certification label stating that it meets Canadian Gas Association and Canadian Standards Association standards

End Fittings:
- Hoses are supplied with cadmium plated, schedule 80 carbon steel male nipples with wrench pad welded on. Each end is externally swaged onto the hose using a cadmium plated carbon steel ferrules

Test Certificate:
- Hoses are supplied with a certificate and unique ID permanently attached to the hose

Options:
- Ballistic Cover - for use in high abrasion environments
- Name Branding - branding for identification
- Stainless Steel Wires - to reduce corrosion

Part #	I.D. (in.)	O.D. (in.)	Working PSI	Bend Radius (in.)	Weight (lbs/ft)	Standard Length
GH10	1	-	350	3	1.00	50
GH12	1 1/4	-	350	4.0	1.20	50
GH15	1 1/2	-	350	5.0	1.30	50
GH20	2	-	350	6.0	1.90	50

Clear PVC Tubing - Food Grade

Applications:
- Food & Beverage
- Water Distillation lines and deionized water systems
- Air conditioning and refrigeration drainage
- Sight gauge and drain lines
- Transfer of weak chemicals and acids

Tube:
- Compounded from non-toxic crystal clear PVC ingredients, formulated to meet applicable FDA, USDA, 3A, and NSF regulations

Temp Range:
- +25°F to +150°F

Part #	I.D. (in.)	O.D. (in.)	Wall (in.)	Working PSI	Weight (lbs/ft)	Standard Length
CVT013025	1/8	1/4	1/16	65	.020	100
CVT019025	3/16	1/4	1/32	50	.012	100
CVT019031	3/16	5/16	1/16	55	.027	100
CVT019038	3/16	3/8	3/32	60	.045	100
CVT025038	1/4	3/8	1/16	55	.034	100
CVT025044	1/4	7/16	3/32	58	.055	100
CVT025050	1/4	1/2	1/8	60	.080	100
CVT031050	5/16	1/2	3/32	55	.065	100
CVT031056	5/16	9/16	1/8	60	.094	100
CVT038050	3/8	1/2	1/16	45	.047	100
CVT038063	3/8	5/8	1/8	55	.107	100
CVT044056	7/16	9/16	1/16	35	.060	100
CVT050063	1/2	5/8	1/16	30	.060	100
CVT050075	1/2	3/4	1/8	45	.134	100
CVT063075	5/8	3/4	1/16	25	.082	100
CVT063088	5/8	7/8	1/8	40	.16	100
CVT075088	3/4	7/8	1/16	19	.109	100
CVT075100	3/4	1	1/8	35	.19	100
CVT075125	3/4	1 1/4	1/4	45	.43	100
CVT088113	7/8	1 1/8	1/8	30	.21	100
CVT088125	7/8	1 1/4	3/16	35	.34	100
CVT100125	1	1 1/4	1/8	25	.24	100
CVT100138	1	1 3/8	3/16	30	.38	100
CVT100150	1	1 1/2	1/4	35	.54	100
CVT125150	1 1/4	1 1/2	1/8	20	.29	50
CVT125175	1 1/4	1 3/4	1/4	40	.64	50
CVT150188	1 1/2	1 7/8	3/16	30	.54	50
CVT150200	1 1/2	2	1/4	35	.75	50
CVT200250	2	2 1/2	1/4	35	.96	50

Clear Reinforced PVC Tubing - Food Grade

Applications:
- Air and water lines
- Food and beverage dispensing
- Liquid and powder food products
- Pneumatic lines
- Transfer of weak chemicals and acids

Temp Range:
- +25°F to +150°F

Part #	I.D. (in.)	O.D. (in.)	Working @ 70˚F (PSI)	Working @ 122˚F (PSI)	Weight (lbs/ft)	Standard Length
CRT019	3/16	.375	250	150	.04	300
CRT025	1/4	.438	250	150	.06	300
CRT031	5/16	.531	250	135	.08	300
CRT038	3/8	.594	225	125	.09	300
CRT050	1/2	.750	200	100	.13	300
CRT062	5/8	.891	200	100	.18	200
CRT075	3/4	1.031	150	85	.22	200
CRT100	1	1.300	125	75	.30	200
CRT125	1 1/4	1.62	100	55	.46	100
CRT150	1 1/2	1.938	100	50	.64	100
CRT200	2	2.490	75	35	.94	100

Flour Hose with Static Wire

Applications:
- Transfer of dry bulk food products; bulk sugar, flour, rice, corn
- Transfer of plastic pellets
- FDA approved materials
- Resists abrasion and weather

Tube:
- White natural rubber, FDA approved

Reinforcement:
- Braided synthetic yarn with dual stainless steel static wires

Cover:
- Grey natural rubber / SBR blend

Temp Range:
- -20°F to +160°F

Part #	I.D. (in.)	O.D. (in.)	Working PSI	Bend Radius (in.)	Weight (lbs/ft)	Standard Length
BDF400	4	4.75	50	11.0	2.25	100

Grey Food Transfer Hose

Applications:
- Transfer by pumping, suction, and discharge of non-dairy food products (bulk liquid, sugar, syrups, and vegetable oils)
- Meets FDA and USDA requirements
- Resists abrasion, animal fat, oil, and weather

Tube:
- Vinyl Nitrile, FDA approved

Reinforcement:
- Textile, 4 spiral and helical wires

Cover:
- Light grey vinyl nitrile

Temp Range:
- -40°F to +180°F

Part #	I.D. (in.)	O.D. (in.)	Working PSI	Bend Radius (in.)	Weight (lbs/ft)	Standard Length
OHSFH150	1 1/2	2.13	150	4.0	1.2	100
OHSFH200	2	2.63	150	5.0	1.5	100
OHSFH300	3	3.63	150	9.0	2.2	100
OHSFH400	4	4.63	150	11.0	3.2	100

White Food Transfer Hose

Applications:
- Transfer of milk, juice, beer, soft drinks, pharmaceuticals, cosmetics or water-based products requiring an FDA sanitary hose.

Reinforcement:
- Synthetic, high tensile textile with static conductive filament; resilient monofilament helic providing crush and kink resistance.

Tube:
- Type S (Sanitron). White

Cover:
- Type P (EPDM). White or gray with burgundy spiral stripe

Temp Range:
- -40°F to +230°F

Part #	I.D. (in.)	O.D. (in.)	Working (PSI)	Bend Radius (in.)	Weight (lbs/ft)	Standard Length
FM075WHITE	3/4	1.22	250	2.0	.42	100
FM100WHITE	1	1.48	250	3.0	.52	100
FM150WHITE	1 1/2	2.07	250	4.5	.90	100
FM200WHITE	2	2.62	250	6.0	1.19	100
FM250WHITE	2 1/2	3.25	250	12.0	1.81	100
FM300WHITE	3	3.86	250	18.0	2.46	100
FM400WHITE	4	4.88	250	36.0	3.24	100

KanaFlex 200 SFG Food Hose

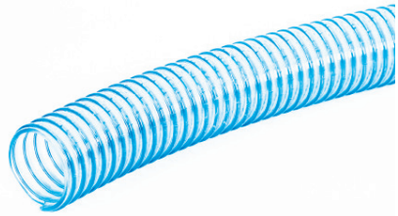

Applications:
- Food Grade suction hose for use in canning, dairy, and bottling
- FDA approved materials
- Resists abrasion

Tube:
- Smooth bore flexible clear PVC

Reinforcement:
- Corrugated rigid PVC helix

Temp Range:
- -13°F to +140°F

Part #	I.D. (in.)	O.D. (in.)	Working (PSI)	Bend Radius (in.)	Weight (lbs/ft)	Standard Length
200SFG100	1	1.25	50	1.5	.18	100
200SFG125	1 1/4	1.52	45	2.0	.22	100
200SFG150	1 1/2	1.81	45	2.5	.35	100
200SFG200	2	2.36	40	4.0	.50	100
200SFG250	2 1/2	2.87	35	4.5	.68	100
200SFG300	3	3.50	35	6.0	1.00	100
200SFG400	4	4.63	30	8.0	1.52	100

KanaFlex 210 HFG Food Hose

Applications:
- Food grade suction hose for use in canning, dairy, and bottling
- FDA approved materials
- Resists abrasion

Tube:
- Smooth bore flexible clear PVC

Reinforcement:
- Smooth PVC helix

Temp Range:
- -13°F to +140°F

Part #	I.D. (in.)	O.D. (in.)	Working (PSI)	Bend Radius (in.)	Weight (lbs/ft)	Standard Length
210HFG075	3/4	.96	86	1.9	.16	100
210HFG100	1	1.25	86	1.9	.26	100
210HFG125	1 1/4	1.54	79	2.7	.37	100
210HFG150	1 1/2	1.82	72	2.8	.44	100
210HFG200	2	2.39	72	3.9	.74	100
210HFG250	2 1/2	2.93	72	5.0	1.01	100
210HFG300	3	3.43	62	7.0	1.21	100
210HFG400	4	4.53	55	9.1	2.01	100

KanaFlex 212 MK Food Hose

Applications:
- Same as 210HFG, only more flexible
- Designed for milk hauling (tank truck) and pick-up
- FDA approved materials
- Resists abrasion

Tube:
- Smooth bore flexible clear PVC

Reinforcement:
- Smooth PVC Helix

Temp Range:
- -13°F to +140°F

Part #	I.D. (in.)	O.D. (in.)	Working PSI	Bend Radius (in.)	Weight (lbs/ft)	Standard Length
212MK150	1 1/2	1.82	66	2.0	.44	100
212MK200	2	2.39	66	2.5	.74	100
212MK250	2 1/2	2.93	66	4.7	1.01	100
212MK300	3	3.43	62	6.1	1.21	100

TigerFlex WE Heavy Duty Food Hose with Static Wire

Applications:
- Embedded static wire
- Paper mill vacuum lines

Tube:
- Smooth bore clear PVC (visual flow confirmation)

Cover:
- Corrugated PVC with embedded static wire

Temp Range:
- -40°F to +150°F

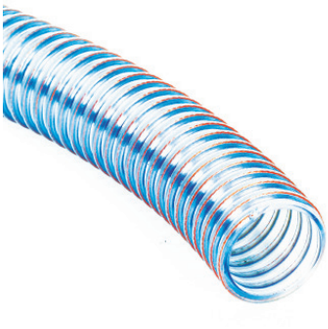

Part #	I.D. (in.)	O.D. (in.)	Working (PSI)	Bend Radius (in.)	Weight (lbs/ft)	Standard Length
WE125	1 1/4	1.65	50	2.0	.33	100
WE150	1 1/2	1.93	50	3.0	.43	100
WE200	2	2.48	40	4.0	.58	100
WE250	2 1/2	3.07	40	5.0	.89	100
WE300	3	3.64	40	6.0	1.25	100
WE350	3 1/2	4.27	35	8.0	1.55	60
WE400	4	4.72	35	10.0	1.93	60
WE500	5	5.74	30	16.0	2.40	60
WE600	6	6.81	30	18.0	3.70	60

TigerFlex 2020 Dry Food

Applications:
- Pneumatic conveying systems for powder, pellets, or other dry granular materials
- Dry food transfer systems, such as flour, rice, grains, etc.
- FDA approved materials
- Polymer pellet transfer through 2020 is 60-70% quieter then with stainless steel hoses
- Highly resistant to abrasion

Tube:
- Smooth bore clear polyurethane (visual flow confirmation)

Reinforcement:
- Woven polyester fabric

Cover:
- Corrugated blue PVC helix with embedded static wire

Temp Range:
- -40°F to +150°F

Part #	I.D. (in.)	O.D. (in.)	Working (PSI)	Bend Radius (in.)	Weight (lbs/ft)	Standard Length
2020BL300	3	3.78	70	10.0	1.20	100
2020BL400	4	4.84	65	12.0	1.60	100
2020BL500	5	5.79	45	14.0	2.45	50
2020BL600	6	6.93	40	16.0	2.86	50

Stainless Steel Blower Hose R360S Unlined [packed]

Applications:
- For engine intake and exhaust systems, conduit, granular materials, spouts, casings, and chimnet liners

Tube:
- Smooth bore interlocked stainless steel .018" strip thickness

Temp Range:
- -60°F to +400°F

Part #	I.D. (in.)	O.D. (in.)	Working PSI	Bend Radius (in.)	Weight (lbs/ft)	Standard Length
R360S150	1 1/2	-	15	7.3	.94	25,50,60
R360S175	1 3/4	-	15	9.2	1.10	25,50,60
R360S200	2	-	15	10.5	1.23	25,50,60
R360S225	2 1/4	-	15	10.8	1.40	25,50,60
R360S250	2 1/2	-	15	12.0	1.53	25,50,60
R360S275	2 3/4	-	15	12.8	1.67	25,50,60
R360S300	3	-	15	14.0	1.82	25,50,60
R360S350	3 1/2	-	15	15.5	2.11	25,50,60
R360S400	4	-	15	16.5	2.40	25,50,60
R360S450	4 1/2	-	15	18.0	2.70	25,50,60
R360S500	5	-	15	20.0	2.99	25,50,60
R360S600	6	-	15	26.0	3.57	25,50,60

Hot Air Blower Hose - Rubber

Applications:
- Hot air blower hose, hot, dry, non-oily air applications
- Resists aging, heat (intermittent service to 350°F), and weather

Tube:
- EPDM

Temp Range:
- -95°F to+300°F

Part #	I.D. (in.)	O.D. (in.)	Working PSI	Bend Radius (in.)	Weight (lbs/ft)	Standard Length
WHA300	3	3.73	150	9.0	2.3	100
WHA400	4	4.61	100	11.0	2.9	100

Contitech Pyroflex II Hot Air

Applications:
- For conveying hot air from compressors to tanks on bulk dry material carrier

Cover:
- Heat-resistant black EPDM synthetic rubber with orange spiral stripe (wrapped impression)

Tube:
- EPDM

Temp Range:
- -20°F to+325°F

OHS Dry Material Hose - Softwall

Applications:
- Transfer of dry cement and other mildly abrasive materials
- May also be used for wet abrasive applications
- Resists abrasion and weather

Tube:
- Black natural rubber

Reinforcement:
- Multiple layers of high tensile synthetic cords

Cover:
- Black synthetic rubber

Temp Range:
- -25°F to +180°F

Part #	I.D. (in.)	O.D. (in.)	Working PSI	Tube Thickness	Weight (lbs/ft)	Standard Length
CDH400W0125	4	4.49	75	1/8	1.50	100
CDH400W188	4	4.64	75	3/16	2.15	100

Dry Material Discharge Hose - Softwall

Applications:
- For discharge of sand or other highly abrasive dry materials
- May also be used for wet abrasive applications
- Resists abrasion and weather

Tube:
- Black natural rubber

Reinforcement:
- Multiple layers of high tensile synthetic cords

Cover:
- Black synthetic rubber

Temp Range:
- -25°F to +180°F

Part #	I.D. (in.)	O.D. (in.)	Working PSI	Tube Thickness	Weight (lbs/ft)	Standard Length
SCD400	4	4.72	75	1/4	2.60	100

Kanaflex Kanaboom - Boom Hose

Applications:
- Hydro-vac trucks, vacuum trucks, general construction use, wet and dry full vacuum rated

Construction:
- Flexible PVC Liner, rigid PVC Helix, synthetic braiding, smooth bore, static dissipating materials and grounding wire

Features:
- Lightweight and flexible in sub-zero temperatures, abrasive resistant polyurethane tube, external helix provides for easy drag

Temp Range:
- -33°F to 140°F

Part #	I.D. (in.)	O.D. (in.)	Working PSI	Bend Radius (in.)	Weight (lbs/ft)	Standard Length
STK400-S	4	4.86	75	9.0	2.1	As Required
STK600-S	6	7.37	70	22.0	4.7	As Required
STK800-S	8	9.54	60	34.0	6.5	As Required

KanaFlex 180HR Material Hose

Applications:
- Heavy duty suction applications where higher temperature and abrasion are factors such as vacuum trucks, fly ash, crushed rock, sand, pea gravel, cement powder
- Lightweight, flexible, extreme resistance to abrasion and weather

Tube:
- Smooth bore EPDM rubber blended with static carbon

Reinforcement:
- Polyethylene helix embedded with groundable metal helical wire

Cover:
- Corrugated EPDM rubber

Temp Range:
- -40°F to +220°F

Part #	I.D. (in.)	O.D. (in.)	Working PSI	Bend Radius (in.)	Weight (lbs/ft)	Standard Length
180HR400	4	4.69	30	5.5	1.75	100
180HR600	6	6.83	30	9.8	3.46	100
180HR800	8	9.13	30	15.0	6.00	50

KanaFlex 180AR Material Hose

Applications:
- Heavy duty abrasion resistant suction hose for vacuum trucks
- Transfer of abrasives such as crushed rock, sand, pea gravel, cement powder, dry fertilizer, and grains
- Lightweight, flexible, extreme resistance to abrasion and weather

Tube:
- Smooth bore SBR rubber blended with static carbon

Reinforcement:
- Rigid PVC helix

Cover:
- Corrugated SBR rubber

Temp Range:
- -40°F to +140°F

Part #	I.D. (in.)	O.D. (in.)	Working PSI	Bend Radius (in.)	Weight (lbs/ft)	Standard Length
180AR125	1 1/4	1.57	45	2.0	.31	100
180AR150	1 1/2	1.82	45	2.0	.37	100
180AR200	2	2.35	40	2.5	.50	100
180AR250	2 1/2	2.95	35	2.5	.88	100
180AR300	3	3.5	35	3.0	1.10	100
180AR350	3 1/2	4.11	30	4.0	1.35	100
180AR400	4	4.63	30	4.5	1.77	100
180AR500	5	5.76	30	5.0	2.47	100
180AR600	6	6.73	30	9.2	3.08	100
180AR700	7	7.83	30	14.0	4.10	50
180AR800	8	9.04	30	15.0	5.65	50
180AR1000	10	11.18	28	30.0	8.88	20
180AR1200	12	13.31	25	40.0	10.43	20

SuperFlex SF400 Stainless Steel Dry Material Hose

Applications:
- Pneumatic conveying of grains, powder, pellets, clay, ash, fertilizers, wood chips, drugs, chemicals, corrosive, hot, or abrasive materials, and a variety of other dry products

Tube:
- Extra smooth stainless steel liner 0.015" thickness

Packing:
- Cotton (other packings are available on special order)

Cover:
- Interlocked stainless steel 0.018" thickness

Temp Range:
- -60°F to +1800°F

Part #	I.D. (in.)	O.D. (in.)	Working PSI	Bend Radius (in.)	Weight (lbs/ft)	Standard Length
SF400KU150	1 1/2	-	15	12.4	1.45	25
SF400KU175	1 3/4	-	15	14.0	1.68	25
SF400KU200	2	-	15	16.5	1.92	25
SF400KU225	2 1/4	-	15	17.0	2.15	25
SF400KU250	2 1/2	-	15	18.1	2.37	25
SF400KU275	2 3/4	-	15	18.3	2.60	25
SF400KU300	3	-	15	20.0	2.82	25
SF400KU350	3 1/2	-	15	21.0	3.29	25
SF400KU400	4	-	15	22.5	3.75	25
SF400KU450	4 1/2	-	15	24.8	4.21	25
SF400KU500	5	-	15	26.9	4.68	25
SF400KU600	6	-	15	31.0	5.59	25
SF400KU700	7	-	15	32.5	6.52	25
SF400KU800	8	-	15	36.0	7.74	25
SF400KU1000	10	-	15	50.0	9.65	25
SF400KU1200	12	-	15	60.0	11.65	25

Adapter with Straight Pipe Thread (NPSM) for Dry Material Hose

Size	Aluminum
3	DAL300AS
4	DAL400AS
5	DAL500AS
6	DAL600AS

Coupler with Straight Pipe Thread (NPSM) for Dry Material Hose

Size	Aluminum
3	DAL300DS
4	DAL400DS
5	DAL500DS
6	DAL600DS

Sand Blast Hose

Applications:
- For conducting sand, steel shot, and other abrasives for blast cleaning

Tube:
- Thick black static conductive abrasion resistant natural rubber

Reinforcement:
- Two layers of synthetic textile cords

Cover:
- Black static conductive synthetic rubber

Temp Range:
- -30°F to +180°F

Part #	I.D. (in.)	O.D. (in.)	Working PSI	Bend Radius (in.)	Weight (lbs/ft)	Standard Length
OHSSB050	1/2	1.20	150	-	.47	50,100
OHSSB075	3/4	1.50	150	-	.65	50,100
OHSSB100	1	1.89	150	-	1.00	50,100
OHSSB125	1 1/4	2.16	150	-	1.22	50,100
OHSSB150	1 1/2	2.36	150	-	1.36	50,100
OHSSB200	2	2.87	150	-	1.70	50,100
OHSSB250	2 1/2	3.42	150	-	2.21	100
OHSSB300	3	3.98	150	-	2.57	100

Tan Bulk Hose - Hardwall

Applications:
- Suction and discharge of non-oily, wet and dry abrasive materials such as corn, flour, sand, limestone powder, plastic pellets and sugar.

Tube:
- Tan smooth abrasion resistant, 3/16" FDA approved natural rubber.

Reinforcement:
- A high tensile steel helix embedded between layers of textile cords.

Cover:
- Tan non-marking,weather resistant EPDM, corrugated for flexibility.

Temp Range:
- -25°F to +180°F

Part #	I.D. (in.)	O.D. (in.)	Working PSI	Bend Radius (in.)	Weight (lbs/ft)	Standard Length
TBM300	3	4	100	9.0	3.2	100
TBM400	4	5	100	11.0	4.4	100

Tan Bulk Hose (SBQ Brand) - Hardwall

Applications:
- For tank truck and in-plant service. Used to convey non-oily abrasive materials such as sand, limestone, plastic pellets and dry abrasive food products.

Tube:
- Pureten™ gum rubber (FDA/USDA compliant)

Reinforcement:
- Spiral-plied synthetic fabric with wire helix

Cover:
- Tan Plioflex® gum rubber (corrugated)

Temp Range:
- -40˚F to 180˚F

Part #	I.D. (in.)	O.D. (in.)	Working PSI	Bend Radius (in.)	Weight (lbs/ft)	Standard Length
GPTF300SBQ	3	3.63	75	6	1.94	100
GPTF400SBQ	4	4.69	75	9	2.74	100

Boom Hose - Hardwall

Applications:
- Designed for wet or dry abrasive products transfer service

Tube:
- 1/4" Thick tan or Red natural gum rubber (other thicknesses available)

Reinforcement:
- Spiral-plied synthetic fabric with helix wire

Cover:
- Black abrasion, weather & ozone resistant NR/SBR synthetic rubber

Temp Range:
- -20°F to +180°F

TAN TUBE

Part #	I.D. (in.)	O.D. (in.)	Working PSI	Bend Radius (in.)	Weight (lbs/ft)	Standard Length
IVH6	6	7.23	150	36	6.71	As Required
IVH8	8	9.36	150	56	9.97	As Required
IVH10	10	11.72	150	70	15.70	As Required

RED TUBE

Part #	I.D. (in.)	O.D. (in.)	Working PSI	Bend Radius (in.)	Weight (lbs/ft)	Standard Length
IVH6R	6	7.23	150	36	6.71	As Required
IVH8R	8	9.36	150	56	9.97	As Required
IVH10R	10	11.72	150	70	15.70	As Required

Stainless Steel Braided Hose

Applications:
- Stainless steel braided hose commonly used in Power Generation, Steel, Chemical, Oil and Gas industries

Tube:
- Corrugated 316 or 321 stainless steel tube, designed to provide high resistance to corrosion as well as to allow for good flexibility and good service life

Reinforcement:
- 304 stainless braid (single or double)

Temp Range:
- -423°F to +1500°F

Normal I.D.	No. Braids	O.D. (in.)	Weight Per Foot (lbs.)	Constant (di.) Flexing (in.)	Bend (di.) Static (in.)	Max Work PSI	Max Test PSI	Burst PSI
1/4”	0	.48	.09			180	270	-
	1	.57	.17	5.00	1.00	2116	3844	8464
	2	.64	.26			3125	4687	12500
3/8”	0	.63	.13	5.50	1.25	100	150	-
	1	.70	.25			1501	2251	6004
	2	.81	.36			2401	3602	9604
1/2”	0	.82	.23	6.00	1.50	80	120	-
	1	.89	.34			1075	1613	4301
	2	.96	.46			1720	2580	6880
3/4”	0	1.21	.39	8.00	2.25	70	105	-
	1	1.28	.59			792	1188	3168
	2	1.35	.79			1267	1901	5069
1”	0	1.51	.53	9.00	2.75	40	60	-
	1	1.58	.75			571	857	2285
	2	1.65	.98			914	1370	3654
1 1/4”	0	1.85	.76	10.50	3.50	25	38	-
	1	1.93	1.07			531	797	2125
	2	2.02	1.37			850	1274	3398
1 1/2”	0	2.19	.84	12.00	4.00	20	30	-
	1	2.28	1.23			472	708	1887
	2	2.37	1.63			755	1133	3021
2”	0	2.60	.90	15.00	5.00	15	23	-
	1	2.72	1.52			516	774	2064
	2	2.84	2.14			826	1239	3302
2 1/2”	0	3.23	1.16	20.00	8.00	12	18	-
	1	3.33	1.86			387	581	1548
	2	3.43	2.56			619	929	2477
3”	0	3.78	1.21	22.00	9.00	10	15	-
	1	3.88	2.00			316	474	1264
	2	3.98	2.80			506	758	2022
4”	0	4.85	1.69	27.00	13.00	8	12	-
	1	4.98	2.68			232	348	927
	2	5.10	3.68			371	557	1485
5”	0	5.90	2.50	31.00	18.00	6	9	-
	1	6.03	3.75			191	286	764
	2	6.15	5.00			306	458	1222
6”	0	6.87	3.47	36.00	19.00	5	8	-
	1	7.10	4.75			165	247	660
	2	7.33	6.04			264	396	1056
8”	0	9.09	5.56	40.00	20.00	6	9	-
	1	9.19	9.44			234	350	934
	2	9.28	13.36			374	561	1495

STAINLESS STEEL BRAIDED HOSE

All Types Including:

CRN/TSSA
CGA/CSA
Propane &
Natural Gas
Certified

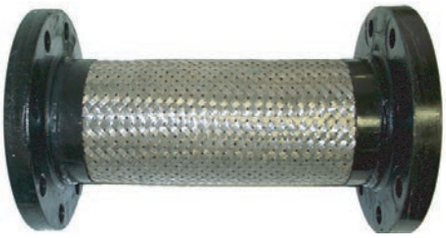

Welded in our
own shop.

Mississauga
Phone: (905) 670-0113
Toll Free: 1-877-668-4673

Corunna
Phone: (519) 336-8541
Toll Free: 1-866-336-8541

ONTARIO HOSE
Specialties LTD.
web: www.OntarioHose.com
email: sales@ontariohose.com
~ISO: 9001:2008 Certified~

Quebec
Phone: (514) 685-1266

Darmouth
Phone: (902) 465-5220

Stoney Creek
Phone: (905) 662-0276

Teflon Hose - Corrugated

Applications:
- Provides the utmost in performance, reliability and durability
- Handles rugged conditions, extremes of heat and cold, and corrosive and lethal chemicals
- Teflon is non-aging, has extreme resistance to weather, and its non-stick surface makes cleaning easy

Tube:
- Convoluted Teflon tube with static liner (8500 series) or without (8000 series)

Reinforcement/Cover:
- Stainless steel (304) braid

Temp Range:
- -65°F to +400°F

Part #	I.D. (in.)	O.D. (in.)	Working PSI	Bend Radius (in.)	Weight (lbs/ft)	Standard Length
With Static Liner						
8508	1/2	0.78	1550	1.5	.23	-
8512	3/4	1.05	1250	2.5	.31	-
8516	1	1.32	1000	3.0	.42	-
8520	1 1/4	1.58	1000	3.5	.52	-
8524	1 1/2	1.83	750	4.5	.59	-
8532	2	2.38	550	6.0	.86	-
Without Static Liner						
8008	1/2	0.78	1550	1.5	.23	-
8012	3/4	1.05	1250	2.5	.31	-
8016	1	1.32	1000	3.0	.42	-
8020	1 1/4	1.58	1000	3.5	.52	-
8024	1 1/2	1.83	750	4.5	.59	-
8032	2	2.38	550	6.0	.86	-

Smooth Bore PTFE Hose

Application:
- Conveying of acids, chemicals, food and Pharmaceuticals

Reinforcement/Cover:
- Stainless steel (304) braid

Temp Range:
- -65°F to +450°F

Part #	I.D. (in.)	O.D. (in.)	Working PSI	Bend Radius (in.)	Wall Thickness (in)	Vacuum Service
S-4TW	3/16	.305	3000	2.0	.030	28
S-5TW	1/4	.375	3000	3.0	.030	28
S-6TW	5/16	.430	2500	4.0	.030	28
S-7TW	3/8	.515	2000	5.0	.030	28
S-8TW	13/32	.535	2000	5.0	.030	28
S-10TW	1/2	.636	1750	6.5	.030	28
S-12TW	5/8	.765	1500	7.5	.030	28
S-14TW	3/4	.890	1000	8.5	.035	28
S-16TW	7/8	1.030	1000	9.0	.035	12
S-18ZTW	1	1.215	1000	12.0	.035	12

Fittings for Smooth Bore and Corrugated Hose

MALE NPT

Size	Aluminum
1/8	S1103
1/4	S11042
3/8	S11062
1/2	S11082
3/4	S1112
1	S1116

FEMALE JIC

Size	Aluminum
1/8	-
1/4	J44C
3/8	J68C
1/2	J88C
3/4	-
1	-

Pharmaceutical

Hose - Fittings - Assemblies

Bioflex

Purpose

For the rugged applications where the hose may be subjected to rough treatment and severe external abrasion. Also For hygenic applications, where the external smoothness and cleanability of the hose is prime importance.

Conventional convoluted PTFE liner

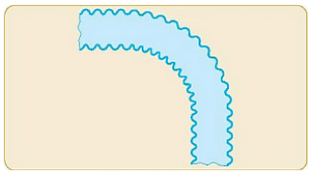

Bioflex PTFE liner

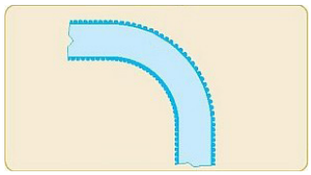

Cover	EPDM or silicone rubber cover, or polypropylene, PVDF or hastelloy braid
Size Range	3/8” (9.5mm) up to 2” (50mm)
Tube	PTFE
Application	High purity Pharmaceutical, Biotech, Chemical and Foodstuffs. -70°C (-94°F) to +260°C (500°F)

Corroflon

Purpose

Corroflon GP, SS is the general purpose grade of hose and has been carefully designed to satisfy the widest range of application requirements. ***Flare-thru assemblies from stock!***

Corroflon GP PTFE Hose

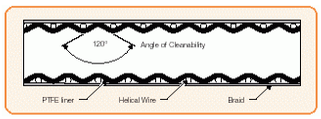

Typical Convolution PTFE Hose

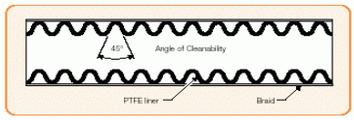

Cover	EPDM or silicone rubber cover, or polypropylene, PVDF or hastelloy braid
Size Range	1/2” (12.7mm) up to 6” (150mm)
Tube	PTFE
Application	High purity Pharmaceutical, Biotech, Chemical and Foodstuffs. -70°C (-94°F) to +230°C (446°F)

Pharmaline

Pharmaline is a PTFE-Lined hose product, based on a patented PTFE hose liner tube design. Pharmaline is designed to overcome the very poor flexibility of currently available similar smoothbore products.

Cover	Platinum cured silicone rubber
Size Range	1/4” to 1”
Tube	PTFE
Application	High purity Pharmaceutical, Biotech, Chemical and Foodstuffs. -60°C (-80°F) to +200°C (400°F)

Pharmalex

Pharmalex is designed to replace conventional all-silicone rubber hoses in applications where the inner silicone rubber liner may be subject to chemical reaction with fluids passing through, which may either contaminate the fluid, or degrade the rubber liner.

Cover	Platinum cured (transparent) silicone rubber
Size Range	1/4” to 1”
Tube	PTFE
Application	High purity Pharmaceutical, Biotech, Chemical and Foodstuffs. -60°C (-80°F) to +200°C (400°F)

Fast Delivery on Lined and Unlined Assemblies!

Drop Hoses

KanaFlex ST120LT - Nitrile Tube

Applications:
- Gasoline tank truck gravity drop for such items as naphtha, kerosene, light and heavy oil, and gasohol
- Rated for up to 40% aromatic content

Tube:
- Vinyl Nitrile - Smooth Bore

Reinforcement:
- Synthetic Braiding

Cover:
- Corrugated Rigid orange PVC Helix - Builtin static grounding wire

Temp Range:
- -30°F to +140°F

Part #	I.D. (in.)	O.D. (in.)	Working PSI	Bend Radius (in.)	Weight (lbs/ft)	Standard Length (ft)
ST120LT200	2	2.68	65	5.0	1.13	100
ST120LT300	3	3.68	65	6.0	1.37	100
ST120LT400	4	4.82	65	8.0	2.16	100

Banding Sleeves for KanaFlex ST120LT Drop Hose. Banding sleeves must be used for 3" and 4" sizes to relieve stress behind fitting.

Part #	I.D. (in.)	Weight (lbs/ft)	Standard Length (ft)
BS300	3	1.15	3
BS400	4	1.48	3

KanaFlex ST120DH - Urethane Tube

Applications:
- Gasoline tank truck gravity drop for such items as naphtha, kerosene, light and heavy oil, and gasohol
- Rated for up to 40% aromatic content

Tube:
- Polyurethane

Reinforcement:
- Synthetic Braiding

Cover:
- Corrugated Rigid orange PVC Helix - Built in static grounding wire

Temp Range:
- -52°F to +140°F

Part #	I.D. (in.)	O.D. (in.)	Working PSI	Bend Radius (in.)	Weight (lbs/ft)	Standard Length (ft)
ST120DH300	3	3.68	65	6.0	1.37	100
ST120DH400	4	4.82	65	8.0	2.16	100

Kuritec EGDH - Urethane Tube

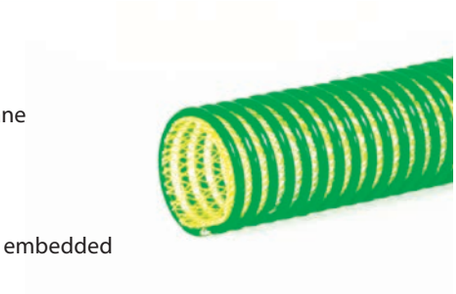

Applications:
- Easily handles gasoline/fuel blends made with MTBE's, methanol, ethanol, toluene, naphtha, kerosene, benzene, and MEK
- Aromatic content not to exceed 50%
- Remains super-flexible in sub-zero weather
- "See-Through" construction allows visual confirmation of flow
- Easy to handle because hose slides easily and is lighter then any other drop hose

Tube:
- Clear non-permeable polyurethane

Reinforcement:
- Polyester fabric - braided

Cover:
- Corrugated green PVC helix with embedded copper static grounding wire

Temp Range:
- -40°F to +150°F

Part #	I.D. (in.)	O.D. (in.)	Working PSI	Bend Radius (in.)	Weight (lbs/ft)	Standard Length (ft)
EGDH300	3.03	3.78	65	6.0	1.20	100
EGDH400	4.04	4.82	65	8.0	1.70	100

Banding Sleeves for TigerFlex TDH Drop Hose. Banding sleeves must be used for 3" and 4" sizes to relieve stress behind fitting.

Part #	I.D. (in.)	Weight (lbs/ft)	Standard Length (ft)
SLVGR300	3	1.20	3
SLVGR400	4	1.70	3

PeraFlex ARPE Petroleum Composite

Peraflex ARPE composite hose was designed specifically for use when transferring petroleum based products in extreme temperatures while specifically addressing the ethanol and bio-diesel fuels issues. Resistance is achieved by using polypropylene tubes in conjunction with multiple wraps of chemically resistant plastic films and Perflex uniquely blended barrier tubes. This construction eliminates potential leaks without sacrificing flexibility, durability or safety.

Applications:
- Chemical Carriers
- In-plant Service
- Rail Tankers
- Fuel Delivery

Tube:
- Seamless polypropylene tubes and films

Reinforcement:
- High strength, high density polyethylene woven fabric

Cover:
- Vinyl coated polyester. Abrasion, ozone and fire resistant

Temp Range:
- -50°F to +180°F

Part #	I.D. (in.)	O.D. (in.)	Working PSI	Bend Radius (in.)	Weight (lbs/ft)	Standard Length (ft)
ARPE300	3	3.50	65	5.5	1.40	up to 26
ARPE400	4	4.75	65	6.0	1.60	up to 26

Vapour Recovery Hoses

Pacific Echo Spiralite W187

Applications:
- For use with Spiralite 5000
- Superior resistance to hydrocarbon vapours
- Leak-resistant under harsh conditions
- High resistance to abrasion
- Easy to handle - flexible, light weight, and slides easily

Tube:
- Clear polypropylene

Reinforcement/Cover:
- Corrugated bright yellow helix embedded with static ground wire

Temp Range:
- -30°F to +140°F

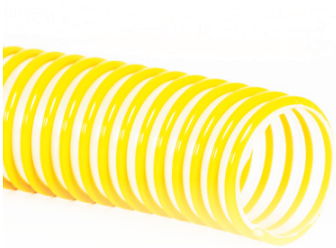

Part #	I.D. (in.)	O.D. (in.)	Working PSI	Bend Radius (in.)	Weight (lbs/ft)	Standard Length (ft)
W187YL300	3	3.54	-	3	.69	100
W187YL400	4	4.56	-	4	.92	100

Banding Sleeves for Spiralite W187 Vapour Recovery Hose. Banding sleeves must be used for 3" and 4" sizes to relieve stress behind fitting.

Part #	I.D. (in.)	Weight (lbs/ft)	Standard Length (ft)
SPBSV300	3	1.15	3
SPBSV400	4	1.48	3

Kuri Tec TigerFlex TV

Applications:
- For use with TigerFlex TVDH
- Superior resistance to hydrocarbon vapours
- Leak-resistant under harsh conditions
- High resistance to abrasion
- Easy to handle - flexible, light weight, and slides easily

Tube:
- Non-permeable polyurethane construction

Reinforcement/Cover:
- Corrugated bright yellow PVC helix embedded with static ground wire

Temp Range:
- -40°F to +150°F

Part #	I.D. (in.)	O.D. (in.)	Working PSI	Bend Radius (in.)	Weight (lbs/ft)	Standard Length (ft)
EVRYL200	2.02	2.46	17	3.0	.51	60/100
EVRYL300	3.03	3.57	11	3.5	.78	60/100
EVRYL400	4.04	4.61	9	4.5	1.1	60/100

Banding Sleeves for TigerFlex TV Vapour Recovery Hose. Banding sleeves must be used for 3" and 4" sizes to relieve stress behind fitting.

Part #	I.D. (in.)	Weight (lbs/ft)	Standard Length (ft)
SLVVAP200	2	1.80	3
SLVVAP300	3	3.09	3
SLVVAP400	4	4.20	3

Kanaflex Vapour Recovery Hose

Applications:
- Tank truck and terminal recovery of gasoline, ethanol and biodiesel vapours

Tube:
- Clear polyurethane

Reinforcement/Cover:
- Corrugated rigid PVC helix embedded with static ground wire

Temp Range:
- -52°F to +140°F

Part #	I.D. (in.)	O.D. (in.)	Working PSI	Bend Radius (in.)	Weight (lbs/ft)	Standard Length (ft)
ST120UACVR300	3	3.56	-	3	.71	100
ST120UACVR400	4	4.7	-	4	.98	100

Peraflex GGP Vapour Recovery Hose

Application:
- Vapour recovery service
- A lightweight composite hose designed to handle the recovery hydrocarbon vapours in the marine environment

Tube:
- Polypropylene inner tube

Cover:
- Yellow cover with red bands each end and the word “Vapour” branded on the hose

Wire:
- Galvanized internal and external

Temp Range:
- -40°F to +212°F

Part #	I.D. (in.)	Working PSI	Bend Radius (in.)	Weight (lbs/ft)	Standard Length
GGP400	4	30	6.5	3.5	20
GGP600	6	30	16.0	4.0	20
GGP800	8	30	22.0	7.0	20

Goodyear Infinity

Applications:
- Constructed with the exclusive PVC double helix for superior flexibility, abrasion resistance and low coefficient of friction for ease of maneuverability. Lightweight in construction, it is designed to transfer biodiesel and ethanol blends, gasoline and other petroleum products under pressure, gravity flow or medium suction (up to 23˝ Hg) at ambient temperature and with an aromatic content of 60% or less.

Tube:
- Black Nitrile synthetic rubber

Reinforcement:
- Synthetic fabric plies with static wire

Cover:
- Black Chemivic synthetic rubber with orange & green Pliovic outer helix

Temp Range:
- -40°F to +160°F

Part #	I.D. (in.)	O.D. (in.)	Working PSI	Bend Radius (in.)	Weight (lbs/ft)	Standard Length (ft)
INFINITY200	2	2.80	150	1.5	1.02	100
INFINITY300	3	3.80	100	2.0	1.46	100
INFINITY400	4	4.80	75	2.5	2.73	100

Goodyear Low Temp Petroleum Tank Truck

Applications:
- For the transfer of gasoline and other petroleum based products under pressure, gravity flow or full suction where a low temperature rating is desired.

Tube:
- Black Nitrile

Reinforcement:
- Spiral plied two steel wires

Cover:
- Blue SBR (Corrugated)

Temp Range:
- -65°F to +180°F (-54°C to +82°C)

Part #	I.D. (in.)	O.D. (in.)	Working PSI	Weight (lbs/ft)	Standard Length (ft)
GATT200	2	2 33/64	150	1.13	100
GATT300	3	3 17/32	150	1.86	100
GATT400	4	4 19/32	150	2.67	100

Goodyear Plicord Extremflex

Applications:
- An extremely flexible and lightweight drop hose for use in tank truck and in-plant operation to transfer diesel, ethanol, gasoline, oil and petroleum based products up to 60% aromatic content. Corrugated construction for lower drag coefficient and superior abrasion resistance.

Tube:
- Black Nitrile syntheic rubber (class A oil resistance)

Reinforcement:
- Spiral plied synthetic fabric with wire helix

Cover:
- Black Chemivc™ synthetic (corrugated)

Temp Range:
- -40°F to +200°F (-40°C to +93°C)

Part #	I.D. (in.)	O.D. (in.)	Working PSI	Bend Radius (in.)	Weight (lbs/ft)	Standard Length (ft)
GPEFP200	2	2.43	250	2	0.96	100
GPEFP250	2 1/2	3.00	200	2.5	1.41	100
GPEFP300	3	3.50	200	3	1.69	100
GPEFP400	4	4.56	150	4	2.42	100

Goodyear Plicord Arctic Extremflex

Applications:
- An extremely flexible lightweight drop hose for transfer of petroleum-based products under suction, low-pressure discharge or gravity flow. Flexibility maintained down to -65°F(-54°C)

Tube:
- Black Nitrile, RMA Class A (High Oil Resistance)

Reinforcement:
- Spiral plied synthetic fabric with double wire helix

Cover:
- Corrugated black wingprene synthetic rubber (wrapped impression), blue spiral stripe
  Corrugated blue wingprene synthetic rubber (wrapped impression), red spiral stripe

Temp Range:
- -65°F to +180°F (-54°C to +82°C)

Part #	I.D. (in.)	O.D. (in.)	Working PSI	Weight (lbs/ft)	Standard Length (ft)
GPAEFP200	2	2.5	150	1.08	100
GPAEFP300	3	3.48	150	1.62	100
GPAEFP400	4	4.55	150	2.35	100

OHS VAC Tank Suction Hose

Applications:
- Tank truck service, including oil filed vacuum truck, where full suction or rated working pressure are required
- Ideal for hauling crude oil, salt and fresh water, tank bottoms, drilling mud, dilute solutions of hydrochloric acids and diesel fuels

***Note** Not Recommended for highly refined petroleum products such as gasoline.*

Tube:
- Black Vinyl Nitrile

Reinforcement:
- Synthetic, high tensile, textile with steel wire helix

Cover:
- Type D (SBR). Black corrugated with blue spiral stripe

Temp Range:
- -40°F to +180°F
  (continuous service)

Part #	I.D. (in.)	O.D. (in.)	Working PSI	Bend Radius (in.)	Weight (lbs/ft)	Standard Length (ft)
OHSVT100	1	1.42	150	3.0	.52	100
OHSVT125	1 1/4	1.68	150	3.0	.67	100
OHSVT150	1 1/2	1.97	150	3.0	.77	100
OHSVT200	2	2.47	150	4.0	.99	100
OHSVT250	2 1/2	2.99	150	5.0	1.46	100
OHSVT300	3	3.52	150	6.0	1.76	100
OHSVT400	4	4.57	150	8.0	2.29	100
OHSVT600	6	6.67	150	18.0	4.37	50

Hot Tar & Asphalt Hose

Applications:
- Loading and unloading, pumping, suction, or gravity flow discharge
- Transfer of asphalt (e.g. roofing shingle plant)
- Handles intermittent temperatures of hot tar up to +400°F
- Heat, abrasion, oil, and weather resistant

Tube:
- Nitrile

Reinforcement:
- 2 Fiberglass braids and helical wires

Cover:
- Neoprene

Temp Range:
- +350°F

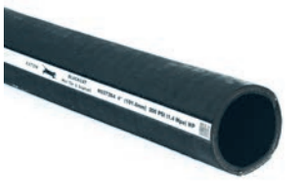

Part #	I.D. (in.)	O.D. (in.)	Working PSI	Bend Radius (in.)	Weight (lbs/ft)	Standard Length (ft)
HTA200	2	2.94	200	7.0	2.34	150
HTA250	2 1/2	3.44	200	10.0	2.85	100
HTA300	3	3.94	200	10.0	3.33	100
HTA400	4	4.97	200	12.0	4.53	100

Tank Truck - Smooth Cover

Applications:
- Transfer of petroleum products, crude oil, salt water, fresh water, and slurries
- Abrasion, animal fat, oil, and weather resistant
- Meets R.M.A. standards (4-to-1 safety factor)

Tube:
- Vinyl Nitrile

Reinforcement:
- Textile, 4 spiral and helical wire

Cover:
- Black Vinyl Nitrile

Temp Range:
- -40°F to +160°F

Part #	I.D. (in.)	O.D. (in.)	Working PSI	Bend Radius (in.)	Weight (lbs/ft)	Standard Length (ft)
OHSTT150	1 1/2	2	150	5	1.06	100
OHSTT200	2	2 1/2	150	6	1.28	100
OHSTT300	3	3 9/16	150	12	1.92	100
OHSTT400	4	4 9/16	150	14	2.67	100

Tank Truck - Corrugated Cover

Applications:
- Transfer of petroleum products, crude oil, salt water, fresh water, and slurries
- Abrasion, animal fat, oil, and weather resistant
- Loading and unloading, pumping, suction, or gravity flow

Tube:
- Vinyl Nitrile

Reinforcement:
- Textile, 2 braid, 4 spiral, 2 ply or 4 ply, and helical wire

Cover:
- Black or Red Vinyl Nitrile

Temp Range:
- -40°F to +180°F

Part #	I.D. (in.)	O.D. (in.)	Working PSI	Bend Radius (in.)	Weight (lbs/ft)	Standard Length (ft)
OHSTTC100	1	1.48	150	6	.75	150
OHSTTC125	1 1/4	1.78	150	6	.85	150
OHSTTC150	1 1/2	2.06	150	5	.98	100
OHSTTC200	2	2.56	150	6	1.15	100
OHSTTC250	2 1/2	3.03	150	9	1.4	150
OHSTTC300	3	3.56	150	12	1.66	100
OHSTTC400	4	4.56	150	14	2.24	100
OHSTTC600	6	6.86	150	30	5.14	150
OHSTTC800	8	8.86	150	-	6.74	50

Tank Truck - Heavy Duty 150PSI Petroleum Hose

Applications:
- Loading and unloading, pumping, suction, bottom loading, and gravity flow discharge
- Transfer of petroleum products
- Abrasion, animal fat, oil, and weather resistant

Tube:
- Vinyl Nitrile

Reinforcement:
- Textile, 2 ply and helical wires

Cover:
- Orange Vinyl Nitrile (6" is black)

Temp Range:
- -40°F to +180°F

Part #	I.D. (in.)	O.D. (in.)	Working PSI	Bend Radius (in.)	Weight (lbs/ft)	Standard Length (ft)
OHSTTFLEX150	1 1/2	2.06	150	4.0	.99	150
OHSTTFLEX200	2	2.56	150	5.0	1.24	150
OHSTTFLEX250	2 1/2	3.03	150	7.5	1.61	150
OHSTTFLEX300	3	3.56	150	8.0	2.00	150
OHSTTFLEX400	4	4.56	150	12.5	2.92	150
OHSTTFLEX600	6	7.25	150	30.0	7.21	150

Blacksnake Curb Pump Hose

Applications:
- Dispensing all types of commercial gasolines, or other petroleum based products, from service station pumps
- A heavy duty hardwall hose which does not collapse in reel use or behind the nozzle in heavy duty service

Tube:
- Black Nitrile

Reinforcement:
- Braided, high tensile steel wire

Cover:
- Black neoprene

Temp Range:
- -40°F to +120°F

Part #	I.D. (in.)	O.D. (in.)	Working PSI	Bend Radius (in.)	Weight (lbs/ft)	Standard Length (ft)
GFLEX0625	5/8	1.00	150	6.0	.37	500
GFLEX075	3/4	1.13	150	6.0	.42	500
GFLEX100	1	1.38	150	8.0	.57	500

Farm Tank Static Wire Hose

Applications:
- Designed for dispensing gasoline, kerosene, and oil from farm or barrel-type pumps on agricultural, industrial, and construction sites
- Highly resistant to oil, gasoline, and weather
- Highly resistant to oil, gasoline, and weather

Tube:
- Black nitrile rubber

Reinforcement:
- Multiple layers of synthetic textile yarn

Cover:
- Black neoprene cover

Temp Range:
- -30°F to +180°F

Part #	I.D. (in.)	O.D. (in.)	Working PSI	Bend Radius (in.)	Weight (lbs/ft)	Standard Length (ft)
158B075	3/4	1.06	100	-	.37	500
158B100	1	1.38	100	-	.54	500

Fuel Oil Delivery Hose

Applications:
- Transferring of fuel oils or commercial gasoline's in applications at temperatures as low as -40°F (remains flexible to -20°F)
- For home and commercial service where a non-marking cover is required

Tube:
- Black Nitrile

Reinforcement:
- Braided, high tensile synthetic textile cord

Cover:
- Red modified nitrile

Temp Range:
- -20°F to +180°F

Part #	I.D. (in.)	O.D. (in.)	Working PSI	Bend Radius (in.)	Weight (lbs/ft)	Standard Length (ft)
FOD100	1	1.50	200	8.0	.58	150
FOD125	1 1/4	1.75	200	10.0	.75	150
FOD138	1 3/8	1.88	200	10.0	.80	150
FOD150	1 1/2	2.08	200	12.0	.95	150

Steam Hose

Applications:
- Transfer of steam for processing products and cleaning equipment
- Transfer of steam or hot 200°F detergent-type solutions for cleaning of equipment, tanks, buildings, etc.
- Resists heat, aging, ozone, and weather
- Meets RMA standards; 10 to 1 safety factor

Tube:
- EPDM

Reinforcement:
- Wire, 2 braid

Cover:
- Red pin pricked EPDM, black

Temp Range:
- +450°F

Part #	I.D. (in.)	O.D. (in.)	Working PSI	Bend Radius (in.)	Weight (lbs/ft)	Standard Length (ft)
CONR050	1/2	1.03	250	-	.46	50
CONR075	3/4	1.34	250	-	.70	50
CONR100	1	1.56	250	-	.96	50

Chlorobutyl Steam Hose

Applications:
- Transfer of steam for processing products and cleaning equipment
- Transfer of steam or hot 200°F detergent-type solutions for cleaning of equipment, tanks, buildings, etc.
- Resists heat, aging, ozone, and weather
- Meets RMA standards; 10 to 1 safety factor

Tube:
- Patrex(Chlorobutyl)

Reinforcement:
- Wire, 2 braid, sepaplate static wire

Cover:
- Black and red stripe pin pricked EPDM

Temp Range:
- +450°F

Part #	I.D. (in.)	O.D. (in.)	Working PSI	Bend Radius (in.)	Weight (lbs/ft)	Standard Length (ft)
CONSTD050	1/2	1.13	250	-	.55	50
CONSTD075	3/4	1.38	250	-	.78	50
CONSTD100	1	1.63	250	-	1.00	50
CONSTD125	1 1/4	1.94	250	-	1.35	50
CONSTD150	1 1/2	2.19	250	-	1.55	50
CONSTD200	2	2.69	250	-	1.94	50

White Washdown Hose

Applications:
- For general clean-up and hot water wash down service in dairies, creameries, meat packing houses, food processing and bottling
- Resists abrasion, heat, mold, and fungus
- Suitable for hot water 200°F

Tube:
- White synthetic rubber

Reinforcement:
- 2 layers of synthetic yarns

Cover:
- White synthetic rubber cover

Temp Range:
- -40°F to +200°F

Part #	I.D. (in.)	O.D. (in.)	Working PSI	Bend Radius (in.)	Weight (lbs/ft)	Standard Length (ft)
WWD050	1/2	0.91	250	-	.31	700
WWD075	3/4	1.25	200	-	.54	700

Layflat PVC Water Discharge Hose - Blue or Brown

Applications:
- A light or heavy duty layflat hose for portable pump and irrigation use

Tube:
- Blue or brown PVC impregnation

Reinforcement:
- Woven high tensile synthetic yarns

Cover:
- Blue or brown PVC impregnation

Temp Range:
- +15°F to +130°F

Part #	I.D. (in.)	O.D. (in.)	Working PSI	Bend Radius (in.)	Weight (lbs/ft)	Standard Length (ft)
Blue						
LAYBL100	1	1.11	150	-	0.13	300
LAYBL125	1 1/4	1.37	130	-	0.15	300
LAYBL150	1 1/2	1.63	70	-	0.15	300
LAYBL200	2	2.13	65	-	0.20	300
LAYBL250	2 1/2	2.63	65	-	0.27	300
LAYBL300	3	3.13	60	-	0.33	300
LAYBL400	4	4.14	60	-	0.46	300
LAYBL500	5	5.15	45	-	0.65	300
LAYBL600	6	6.15	35	-	0.78	300
LAYBL800	8	8.16	35	-	1.20	300
LAYBL1000	10	10.20	35	-	1.75	300
LAYBL1200	12	12.30	30	-	2.50	300
Brown						
LAYBR150	1 1/2	1.66	130	-	0.20	300
LAYBR200	2	2.16	115	-	0.28	300
LAYBR300	3	3.18	100	-	0.46	300
LAYBR400	4	4.18	90	-	0.68	300
LAYBR600	6	6.18	70	-	1.10	300
LAYBR800	8	8.19	60	-	1.66	300

Oroflex Layflat

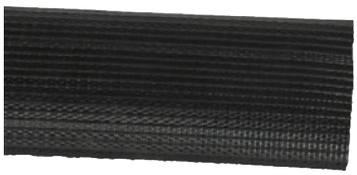

OROFLEX 10

Applications:
- A lightweight high pressure, extremely strong hose for general water discharge, and for some chemicals.

Tube:
- Black or yellow abrasion and oil resistant nitrile rubber

Reinforcement:
- Circular woven polyester yarns layers of synthetic yarns

Cover:
- Black or Yellow abrasion, weather and oil resistant nitrile rubber

Temp Range:
- -40°F to +200°F

OROFLEX 20

Part #	I.D. (in.)	O.D. (in.)	Working PSI	Weight (lbs/ft)	Standard Length (ft)
OF10BK150	1 1/2	1.78	200	.21	200
OF10BK200	2	2.28	200	.30	200
OF10BK250	2 1/2	2.78	175	.42	200
OF10BK300	3	3.32	175	.46	200
OF10BK400	4	4.32	150	.64	200
OF10BK600	6	6.36	150	1.11	200
OF10BK800	8	8.36	150	1.51	200

Part #	I.D. (in.)	O.D. (in.)	Working PSI	Weight (lbs/ft)	Standard Length (ft)
OF20BK075	3/4	.98	400	.10	200
OF20BK100	1	1.34	400	.14	200
OF20BK150	1 1/2	1.86	300	.30	200
OF20BK200	2	2.36	300	.44	200
OF20BK300	3	3.40	250	.64	200
OF20BK400	4	4.40	250	.86	200

Rubber Water Discharge Hose - Softwall

Applications:
- For use on construction sites and general water service
- Resists abrasion and weather

Tube:
- Black synthetic rubber compounded for water service

Reinforcement:
- Multiple layers of synthetic yarn

Cover:
- Black synthetic rubber

Temp Range:
- -30°F to +180°F

Part #	I.D. (in.)	O.D. (in.)	Working PSI	Bend Radius (in.)	Weight (lbs/ft)	Standard Length (ft)
RWD100	1	1.40	150	-	.44	100
RWD125	1 1/4	1.50	150	-	.34	100
RWD150	1 1/2	1.73	150	-	.39	100
RWD200	2	2.24	150	-	.51	100
RWD250	2 1/2	2.76	150	-	.72	100
RWD300	3	3.27	150	-	.86	100
RWD400	4	4.29	150	-	1.02	100
RWD500	5	5.50	150	-	2.40	100
RWD600	6	6.30	150	-	1.77	100
RWD800P	8	8.38	150	-	3.47	100
RWD1000HP	10	10.55	150	-	5.78	50
RWD1200	12	12.52	150	-	5.56	50

Rubber Water Suction & Discharge Hose - Hardwall

Applications:
- A heavy duty wire reinforced rubber hose for construction, quarries, and general use
- Resists abrasion and weather

Tube:
- Smooth black synthetic rubber

Reinforcement:
- High tensile wire helix embedded between layers of textile cords

Cover:
- Black smooth synthetic rubber

Temp Range:
- -22°F to +150°F

Part #	I.D. (in.)	O.D. (in.)	Vacuum (in. Hg)	Working PSI	Bend Radius (in.)	Weight (lbs/ft)	Standard Length (ft)
RWS075	3/4	1.14	29	200	2.0	.50	100
RWS100	1	1.42	29	150	3.0	.68	100
RWS125	1 1/4	1.65	29	150	4.0	.77	100
RWS150	1 1/2	1.93	29	150	4.0	1.00	100
RWS200	2	2.48	29	150	5.0	1.45	100
RWS250	2 1/2	2.99	29	150	8.0	1.84	100
RWS300	3	3.50	29	150	10.0	2.23	100
RWS400	4	4.64	29	125	14.0	3.72	100
RWS500	5	5.67	29	125	20.0	3.90	100
RWS600	6	6.66	29	125	30.0	5.10	100
RWS800	8	8.90	29	50	65.0	8.83	60
RWS1000	10	10.90	29	50	80.0	12.00	40
RWS1200	12	12.99	29	50	100.0	18.57	20

KanaFlex 100CL Water Suction & Discharge Hose

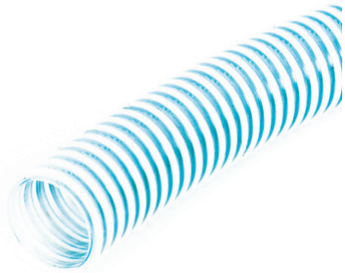

Applications:
- General water suction hose
- Highly flexible

Tube:
- Smooth bore clear flexible PVC

Reinforcement/Cover:
- Corrugated white rigid PVC helix

Temp Range:
- -13°F to +140°F

Part #	I.D. (in.)	O.D. (in.)	Vacuum 72˚F, in. Hg	Working PSI	Bend Radius (in.)	Weight (lbs/ft)	Standard Length (ft)
100CL100	1	1.25	29.8	50	1.5	.18	100
100CL125	1 1/4	1.52	29.8	45	2.0	.22	100
100CL150	1 1/2	1.81	29.8	45	2.5	.35	100
100CL200	2	2.36	29.8	40	3.0	.50	100
100CL250	2 1/2	2.87	29.8	35	4.5	.68	100
100CL300	3	3.50	29.8	35	6.0	1.00	100
100CL400	4	4.63	29.8	30	8.0	1.52	100
100CL500	5	5.63	29.8	30	9.0	2.45	100
100CL600	6	6.85	28.0	30	11.0	3.10	100
100CL800	8	9.04	28.0	30	16.0	5.38	25
100CL1000	10	11.26	28.0	30	30.0	8.88	20

KanaFlex 110CL Water Suction & Discharge Hose

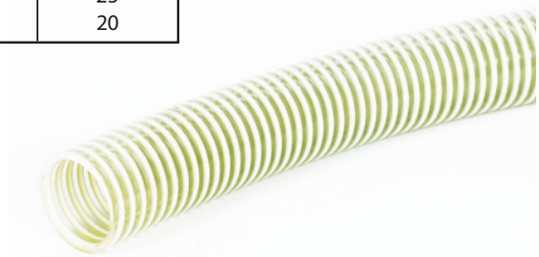

Applications:
- Heavy duty water suction hose

Tube:
- Smooth bore clear flexible PVC

Reinforcement/Cover:
- Rigid PVC helix

Temp Range:
- -13°F to +140°F

Part #	I.D. (in.)	O.D. (in.)	Vacuum 72˚F, in. Hg	Working PSI	Bend Radius (in.)	Weight (lbs/ft)	Standard Length (ft)
110CL075	3/4	.95	29.8	86	1.9	.16	100
110CL100	1	1.25	29.8	86	1.9	.26	100
110CL125	1 1/4	1.52	29.8	79	2.7	.37	100
110CL150	1 1/2	1.81	29.8	72	2.8	.44	100
110CL200	2	2.38	29.8	72	3.9	.74	100
110CL250	2 1/2	2.92	29.8	72	5.0	1.01	100
110CL300	3	3.41	29.8	62	7.0	1.21	100
110CL400	4	4.50	29.8	55	9.1	2.01	100
110CL500	5	5.55	28.0	33	14.0	2.45	100
110CL600	6	6.67	28.0	33	15.0	3.37	100
110CL800	8	8.83	28.0	28	20.0	5.80	25

KanaFlex 116CL Water Suction & Discharge Hose

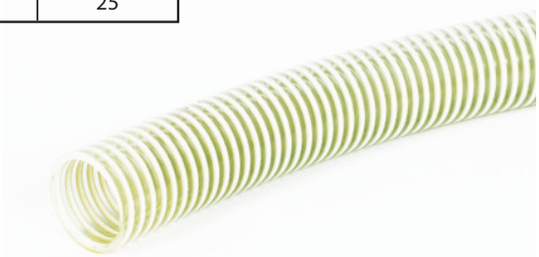

Applications:
- Heavy duty water suction hose

Tube:
- Smooth bore clear flexible PVC

Reinforcement/Cover:
- Rigid PCV helix

Temp Range:
- -22°F to +140°F

Part #	I.D. (in.)	O.D. (in.)	Vacuum 72˚F, in. Hg	Working PSI	Bend Radius (in.)	Weight (lbs/ft)	Standard Length (ft)
116CL125	1 1/4	1.47	29.8	80	3.0	.29	100
116CL150	1 1/2	1.75	29.8	70	4.0	.39	100
116CL200	2	2.27	29.8	65	5.0	.63	100
116CL250	2 1/2	2.84	29.8	65	6.0	.87	100
116CL300	3	3.35	29.8	55	8.0	1.05	100
116CL400	4	4.45	29.8	50	10.0	1.80	100

KanaFlex 220RS Water Suction\Discharge & Sewer Hose

Applications:
- Heavy duty liquid suction hose for use in construction dewatering, liquid waste, cesspool cleaning, septic handling, agricultural applications, and marine use

Tube:
- Smooth bore black SBR rubber polyethylene

Reinforcement:
- Rigid PVC helix

Cover:
- Smooth black SBR rubber polyethylene

Temp Range:
- -40°F to +140°F

Part #	I.D. (in.)	O.D. (in.)	Vacuum 72˚F, in. Hg	Working PSI	Bend Radius (in.)	Weight (lbs/ft)	Standard Length (ft)
220RS150	1 1/2	1.85	29.8	50	3.0	.50	100
220RS200	2	2.40	29.8	50	4.0	.74	100
220RS250	2 1/2	2.99	29.8	50	5.0	1.01	100
220RS300	3	3.50	29.8	43	6.0	1.30	100
220RS400	4	4.57	29.8	38	9.0	2.01	100
220RS600	6	6.69	28.0	23	15.0	3.37	100

KanaFlex 300EPDM Water Suction & Discharge Hose

Applications:
- Heavy duty liquid suction hose for use in construction dewatering, liquid waste, cesspool cleaning, septic handling, agricultural applications and marine use

Tube:
- Smooth bore black EPDM rubber

Reinforcement/Cover:
- Corrugated green polyethylene helix

Temp Range:
- -40°F to +140°F

Part #	I.D. (in.)	O.D. (in.)	Vacuum 72˚F, in. Hg	Working PSI	Bend Radius (in.)	Weight (lbs/ft)	Standard Length (ft)
300EPDM100	1	1.34	29.8	50	1.9	.23	100
300EPDM125	1 1/4	1.65	29.8	50	3.2	.34	100
300EPDM150	1 1/2	1.84	29.8	50	3.2	.40	100
300EPDM200	2	2.43	29.8	50	5.2	.67	100
300EPDM250	2 1/2	2.99	29.8	50	5.6	.92	100
300EPDM300	3	3.52	29.8	43	7.1	1.10	100
300EPDM400	4	4.61	29.8	38	11.0	1.84	100
300EPDM600	6	6.81	28.0	23	20.0	3.07	100

KanaFlex Kanaline Blue Water Suction & Discharge Hose

Applications:
- Heavy-Duty suction and discharge with increased flexibility for use in colder environment applications, where more flexibiilty is desired

Reinforcement/Cover:
- Cold weather PVC, rigid PVC helix, synthetic braiding, smooth bore, corrugated O.D

Temp Range:
- -40°F to +140°F

Part #	I.D. (in.)	O.D. (in.)	Vacuum 72˚F, in. Hg	Working PSI	Bend Radius (in.)	Weight (lbs/ft)	Standard Length (ft)
KBL150	1 1/2	2.10	28.0	75	2.0	.47	60,100
KBL200	2	2.60	28.0	70	3.0	.70	60,100
KBL300	3	3.70	28.0	70	5.0	1.13	60,100
KBL400	4	4.80	28.0	60	7.0	1.74	60,100
KBL600	6	7.30	28.0	50	9.0	3.88	60,100
KBL800	8	9.50	28.0	40	15.0	5.54	15,20,25,40

Marine Exhaust Hardwall Hose

Applications:
- Marine exhaust applications where a hose made to Coast Guard specifications is required
- Resistant to heat, and weather

Tube:
- Black rubber specially compounded for marine use

Reinforcement:
- High tensile wire helix embedded between layers of textile cords

Cover:
- Black synthetic rubber with blue identification stripe

Temp Range:
- -40°F to +212°F

Part #	I.D. (in.)	O.D. (in.)	Weight (lbs/ft)	Standard Length (ft)
MEH078	7/8	1.25	.50	100
MEH100	1	1.38	.57	100
MEH118	1 1/8	1.40	.58	100
MEH125	1 1/4	1.69	.68	100
MEH138	1 3/8	1.81	.75	100
MEH150	1 1/2	1.81	.82	100
MEH163	1 5/8	1.97	1.10	100
MEH175	1 3/4	2.09	1.06	100
MEH178	1 7/8	2.20	1.14	100
MEH200	2	2.32	1.33	100
MEH2125	2 1/8	2.50	1.39	100
MEH225	2 1/4	2.60	1.54	100
MEH238	2 3/8	2.68	1.71	100
MEH250	2 1/2	2.81	1.82	100
MEH258	2 5/8	3.00	2.06	100
MEH278	2 7/8	3.35	2.08	100
MEH300	3	3.54	2.12	100
MEH318	3 1/8	3.70	2.35	100
MEH350	3 1/2	4.09	2.62	100
MEH400	4	4.57	3.02	100
MEH418	4 1/8	4.64	2.75	100
MEH450	4 1/2	5.12	3.57	100
MEH500	5	5.55	3.59	100

Marine Exhaust Softwall Hose

Applications:
- Marine exhaust applications where a hose made to Coast Guard specifications is required
- Resistant to heat, and weather

Tube:
- Black rubber specially compounded for wet marine exhaust service

Reinforcement:
- Multiple piles of synthetic fabric

Cover:
- Black synthetic rubber with blue identification stripe

Temp Range:
- -40°F to +212°F

Part #	I.D. (in.)	O.D. (in.)	Weight (lbs/ft)	Standard Length (ft)
MEHNW078	7/8	1.26	.44	100
MEHNW100	1	1.38	.49	100
MEHNW118	1 1/8	1.50	.52	100
MEHNW125	1 1/4	1.69	.68	100
MEHNW138	1 3/8	1.81	.77	100
MEHNW150	1 1/2	1.93	.79	100
MEHNW163	1 5/8	2.13	.93	100
MEHNW175	1 3/4	2.20	1.01	100
MEHNW178	1 7/8	2.32	1.01	100
MEHNW200	2	2.50	1.21	100
MEHNW213	2 1/8	2.62	1.25	100
MEHNW225	2 1/4	2.76	1.38	100
MEHNW238	2 3/8	2.91	1.55	100
MEHNW250	2 1/2	3.05	1.63	100
MEHNW263	2 5/8	3.23	1.85	100
MEHNW278	2 7/8	3.42	1.88	100
MEHNW300	3	3.54	1.90	100
MEHNW313	3 1/8	3.70	2.09	100
MEHNW350	3 1/2	4.09-	2.30	100
MEHNW400	4	4.57	2.41	100
MEHNW413	4 1/8	4.69	2.53	100
MEHNW450	4 1/2	5.12	3.23	100

WaterBlast Hose

For very high pressure rubber water jet cutting and cleaning system. Scale removal application using extreme high pressure in building and industrial sectors (road works, removal of concrete from reinforced concrete structure safeguarding metal components). Scale removal on ships hulls in shipyard and elimination of dust.
Not recommended for hydraulic application.

Working Temperature:
- -40ºC to +100ºC

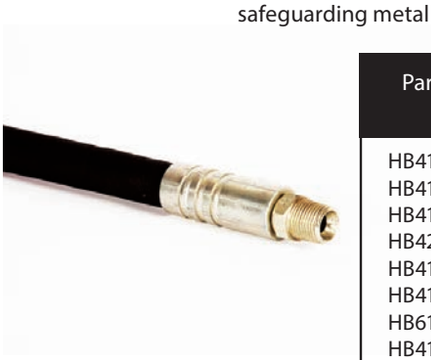

Part #	I.D. (in.)	O.D. (in.)	Working PSI	Bend Radius (in.)	Weight (lbs/ft)	Standard Length (ft)
HB41075	3/8	0.85	10,875	5.9	0.47	50, 100
HB41275	1/2	0.96	10,875	7.8	0.60	50, 100
HB41975	3/4	1.25	10,875	9.8	1.08	50, 100
HB42575	1	1.49	10,875	12.5	1.41	50, 100
HB410110	3/8	0.90	15,950	5.9	0.67	50, 100
HB412110	1/2	1.06	15,950	9.0	0.90	50, 100
HB619110	3/4	1.41	15,950	12.2	1.62	50, 100
HB410125	3/8	0.90	18,125	5.9	0.69	50, 100
HB612125	1/2	1.14	18,125	9.0	0.92	50, 100

Lateral WaterBlast Hose

Applications:
- High pressure water applications

Tube:
- Synthetic rubber

Reinforcement:
- High tensile steel wire spirals for flexibility and strength.

Cover:
- High temperature, ozone and abrasion-resistant

Temp Range:
- -40°F to +200°F

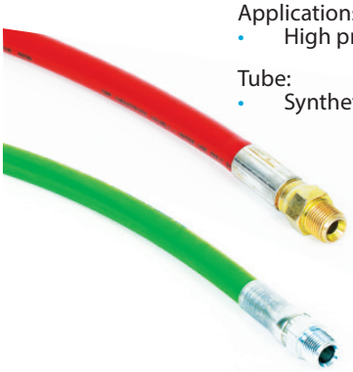

Part #	I.D. (in.)	O.D. (in.)	Working PSI	Burst PSI	Bend Radius (in.)	Weight (lbs/ft)	Colour	Standard Length (ft)
LLGR-04	1/4	0.496	4000	10,000	2 1/2″	0.064	Green	100, 200
LLRD-04	1/4	0.496	5000	12,500	2 1/2″	0.052	Red	100, 200
LLGR-06	3/8	0.648	4000	10,000	3″	1.05	Green	200, 250, 300
LLRD-06	3/8	0.648	5000	12,500	3″	1.25	Red	200, 250, 300

Orange Sewer Flushing Hose

Applications:
- Used on high pressure sewer cleaning equipment

Tube:
- Yellow polyolefin

Reinforcement:
- Single high tensile braid

Cover:
- Orange polyether-urethane cover

Temp Range:
- -40°F to +150°F

* *Sold as assemblies coupled with male NPT swaged on each end. Common lengths are 400, 500, and 600 feet.*

Part #	I.D. (in.)	O.D. (in.)	Working PSI	Bend Radius (in.)	Weight (lbs/ft)	Standard Length (ft)
SHP10	5/8	0.96	2500	4	0.19	400,500,600
SP12	3/4	1.18	2500	5	0.28	400,500,600
SP16	1	1.46	2500	6	0.40	400,500,600

RFH - General Purpose Ducting

Applications:
- Most versatile ducting
- Capable of handling fumes from Methyl Ethyl Ketone, sulfuric acid, or toluene.
- Alternative colours and colour stripes available (black is standard)

Tube:
- Thermoplastic rubber

Reinforcement/Cover:
- Wire helix

Temp Range:
- -60°F to +275°F (intermittent to 300˚F)

Part #	I.D. (in.)	O.D. (in.)	Working PSI	Bend Radius (in.)	Weight (lbs/ft)	Standard Length
RFHBK150	1 1/2	-	-	-	-	25,50
RFHBK200	2	2.27	15	-	.23	25,50
RFHBK225	2 1/4	-	-	-	.28	25,50
RFHBK250	2 1/2	2.77	-	-	.32	25,50
RFHBK300	3	3.27	10	-	.34	25,50
RFHBK350	3 1/2	3.77	-	-	.37	25,50
RFHBK400	4	4.29	8	-	.49	25,50
RFHBK450	4 1/2	-	-	-	.55	25,50
RFHBK500	5	5.29	6	-	.59	25,50
RFHBK550	5 1/2	-	-	-	.63	25,50
RFHBK600	6	6.29	5	-	.67	25,50
RFHBK700	7	7.35	-	-	.88	25,50
RFHBK800	8	8.35	4	-	1.00	25,50
RFHBK900	9	-	-	-	1.38	25,50
RFHBK1000	10	10.38	3	-	1.44	25,50
RFHBK1200	12	12.39	2	-	1.70	25,50
RFHBK1400	14	-	-	-	2.02	25,50
RFHBK1600	16	-	-	-	2.48	25,50
RFHBK1800	18	-	-	-	3.20	25,50
RFHBK2000	20	-	-	-	3.56	25,50
RFHBK2400	24	-	-	-	-	25,50

RFH-W - Wear Strip on RFH Hose

Applications:
- Same as RFH but has an additional wear strip which covers the wire.
- Strip is molecularly bonded to the hose to ensure there is no pre-mature wire wear-through

Temp Range:
- -60°F to +275°F (intermittent to 300°F)

Colour is black with orange wear strip

Part #	I.D. (in.)	O.D. (in.)	Working PSI	Bend Radius (in.)	Weight (lbs/ft)	Standard Length
RFHBK200WSOR	2	2.32	17	3.00	.26	25,50
RFHBK300WSOR	3	3.32	10	4.25	.37	25,50
RFHBK400WSOR	4	4.32	10	6.00	.57	25,50
RFHBK500WSOR	5	5.32	9	6.75	.75	25,50
RFHBK600WSOR	6	6.32	8	8.25	1.00	25,50
RFHBK800WSOR	8	8.40	6	10.25	1.60	25,50
RFHBK1000WSOR	10	10.43	4	12.75	2.05	25,50
RFHBK1200WSOR	12	12.43	4	15.25	2.24	25,50
RFHBK1400WSOR	14	14.63	2	21.00	2.32	25,50
RFHBK1600WSOR	16	16.63	2	26.00	3.74	25,50
RFHBK1800WSOR	18	18.63	2	29.00	3.96	25,50
RFHBK2000WSOR	20	20.63	1	36.00	4.27	25,50
RFHBK2400WSOR	24	24.63	1	42.00	4.42	25,50

RFH-045 - Heavy Duty General Purpose Ducting

Applications:
- Same as RFH but can handle higher pressure and abrasion

Tube:
- Thermoplastic rubber

Reinforcement/Cover:
- Wire helix

Temp Range:
- -60°F to +275°F (intermittent to 300˚F)

Part #	I.D. (in.)	O.D. (in.)	Working PSI	Bend Radius (in.)	Weight (lbs/ft)	Standard Length
RFBK400HD	4	4.35	12	6.50	.66	25,50
RFBK600HD	6	6.38	7	8.50	.91	25,50
RFBK800HD	8	8.41	8	12.00	1.10	25,50
RFBK1000HD	10	10.45	8	14.00	1.66	25,50
RFBK1200HD	12	12.45	6	16.00	2.20	25,50

Super Vacuflex - Industrial Ventilation and Cooling

Applications:
- Bilge, conduit, driver ventilation, PAPR and pellet transfer

Tube:
- High strength fiber reinforced PVC hose

Reinforcement:
- Internal wire helix

Temp Range:
- -20°F to +150°F

Part #	I.D. (in.)	O.D. (in.)	Vacuum Rating	Bend Radius (in.)	Weight (lbs/ft)	Standard Length
SVUF125	1 1/4	2.27	27	0.88	.31	25,50
SVUF150	1 1/2	3.27	26	1.12	.38	25,50
SVUF200	2	4.29	25	1.63	.57	25,50
SVUF250	2 1/2	5.29	24	2.19	.75	25,50
SVUF300	3	6.29	24	2.48	.85	25,50
SVUF400	4	8.35	18	3.26	.94	25,50
SVUF600	6	10.38	10	5.10	1.16	25,50

UFD - Tough Severe Service Applications

Applications:
- Superior abrasion resistance
- Lightweight and flexible
- Leaf loading, chip handling, dust collection, straw blowing, etc.
- Clear so you can see blockages (also in black)

Tube:
- Thermoplastic urethane

Reinforcement:
- Wire helix

Temp Range:
- -65°F to +200°F

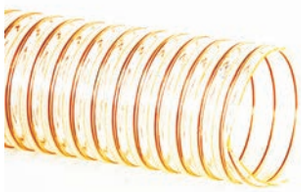

Black Part #	Clear Part #	I.D. (in.)	O.D. (in.)	Working PSI	Weight (lbs/ft)	Standard Length
UFDBK200	UFDCL200	2	2.29	33	.28	25,50
UFDBK250	UFDCL250	2 1/2	2.79	30	.42	25,50
UFDBK300	UFDCL300	3	3.32	27	.53	25,50
UFDBK400	UFDCL400	4	4.34	18	.69	25,50
UFDBK500	UFDCL500	5	5.34	16	.81	25,50
UFDBK600	UFDCL600	6	6.37	14	1.23	25,50
UFDBK700	UFDCL700	7	7.40	12	1.47	25,50
UFDBK800	UFDCL800	8	8.40	11	1.60	25,50
UFDBK1000	UFDCL1000	10	10.41	9	1.84	25,50
UFDBK1200	UFDCL1200	12	12.41	7	2.20	25,50
UFDBK1400	UFDCL1400	14	14.56	4	3.28	25,50
UFDBK1600	UFDCL1600	16	16.59	2	3.75	25,50
UFDBK1800	UFDCL1800	18	18.59	2	4.23	25,50

L-9 - High Temperature Ducting

Applications:
- Air
- Chemical fumes
- Dust
- Exhaust and ventilation
- Temperature extremes
- Vacuum and suction

Tube:
- Two-ply silicone coated fiberglass, red

Reinforcement:
- Helically wound spring steel wire

Temp Range:
- -75°F to +500°F

Part #	I.D. (in.)	O.D. (in.)	Working PSI	Bend Radius (in.)	Weight (lbs/ft)	Standard Length
L9D075	3/4	.87	28	.68	.11	10
L9D100	1	1.12	28	.94	.15	12
L9D125	1 1/4	1.37	26	1.22	.19	12
L9D150	1 1/2	1.62	25	1.45	.22	12
L9D175	1 3/4	1.87	23	1.68	.26	12
L9D200	2	2.12	24	1.88	.33	12
L9D225	2 1/4	2.39	21	2.18	.38	12
L9D250	2 1/2	2.65	20	2.38	.40	12
L9D300	3	3.15	19	2.90	.52	12
L9D350	3 1/2	3.70	18	3.38	.61	12
L9D400	4	4.18	16	3.87	.68	12
L9D450	4 1/2	4.67	15	4.36	.81	12
L9D500	5	5.17	14	4.88	1.05	12
L9D550	5 1/2	5.67	13	5.39	1.11	12
L9D600	6	6.17	11	5.89	1.21	12
L9D650	6 1/2	6.69	11	6.38	1.3	12
L9D700	7	7.19	9	6.88	1.46	12
L9D800	8	8.19	7	7.84	1.48	12
L9D900	9	9.19	6	8.86	1.36	12
L9D1000	10	10.23	5	9.82	1.46	12
L9D1100	11	11.23	4	10.83	1.53	12
L9D1200	12	12.23	4	11.82	1.69	12

U-9 - High Temperature Ducting

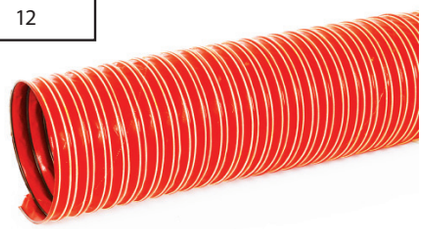

Tube: One-ply silicone coated fiberglass, red
Reinforcement: Spring wire helix
Temp Range: -65°F to +450°F

Part #	I.D. (in.)	O.D. (in.)	Working PSI	Bend Radius (in.)	Weight (lbs/ft)	Standard Length
U9D100	1	1.12	19	.85	0.133	12
U9D125	1 1/4	1.37	18	.96	0.153	12
U9D150	1 1/2	1.62	18	1.2	0.19	12
U9D175	1 3/4	1.87	16	1.51	0.23	12
U9D200	2	2.12	15	1.72	0.3	12
U9D225	2 1/4	2.39	14	2.05	0.34	12
U9D250	2 1/2	2.65	14	2.15	0.37	12
U9D300	3	3.15	13	2.55	0.46	12
U9D350	3 1/2	3.70	12.5	3.1	0.51	12
U9D400	4	4.18	12	3.6	0.56	12
U9D450	4 1/2	4.67	11	4.15	0.68	12
U9D500	5	5.17	10	4.6	0.75	12
U9D550	5 1/2	5.17	9.5	5.2	0.86	12
U9D600	6	6.17	7	5.65	0.82	12
U9D650	6 1/2	6.69	7	6.12	0.86	12
U9D700	7	7.19	6	6.68	0.89	12
U9D800	8	8.19	5	7.58	0.98	12
U9D900	9	9.19	4.3	8.5	1.21	12
U9D1000	10	10.23	3	9.6	1.16	12
U9D1100	11	11.23	2.2	10.3	1.24	12
U9D1200	12	12.23	1.7	11.4	1.37	12

Hose Protection Coverings

Heat resistant silicone coated fiberglass sleeving - Protects hoses, cables and wires from molten metal splash, high heat hazards and occassional exposure to flame, in steel plants, glass plants, foundries, cutting and welding shops.

Manufactured from high bulk knitted or braided fiberglass sleeving, coated with a custom compounded silicone rubber. Designed to form a protective thermal barrier and extend the life of hydraulic lines, hoses, wires and cables in areas of extreme heat exposure in hazardous environments.

Applications:
- Industrial sleeving withstands continuous exposure to 500°F, short-term exposure thru 2200˚F
- Resistant to hydraulic fluids, fuels, and lubricating oils
- Sheds molten metal splash
- Reduces energy loss and offers personnel burn protection through insulating hot oil, steam lines or pipe surfaces
- Pyrotex S/G Fire Sleeve allows the bundling of cables, hoses and wires while providing excellent thermal and abrasion resistance
- Extremely flexible and conformable throughout the entire size range at temperatures -65˚F thru 500˚F

Colour:
- Standard colour is iron oxide red. Other colours available upon request.

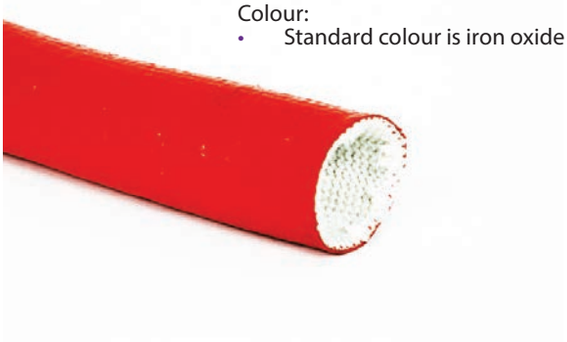

Part #	I.D. (in.)
FJI025	1/4
FJI031	5/16
FJI038	3/8
FJI044	7/16
FJI050	1/2
FJI056	9/16
FJI063	5/8
FJI069	11/16
FJI075	3/4
FJI081	13/16
FJI088	7/8
FJI094	15/16
FJI100	1
FJI113	1 1/8
FJI125	1 1/4
FJI138	1 3/8
FJI150	1 1/2
FJI163	1 5/8
FJI175	1 3/4
FJI188	1 7/8
FJI200	2
FJI213	2 1/8
FJI225	2 1/4
FJI238	2 3/8
FJI250	2 1/2
FJI263	2 5/8
FJI275	2 3/4
FJI300	3
FJI313	3 1/8
FJI325	3 1/4
FJI350	3 1/2
FJI375	3 3/4
FJI400	4

Spiral Guard Wrap

The use of Spiral Guard Wrap is an economical and convenient method of protecting and extending the life of hydraulic and pneumatic hoses, cables, wires and rope from premature wear.

Applications:
- High density, polyethylene (HDPE) plastic spiral wrap-able protective sleeve
- Protects systems where abrasion, cuts, and crushing is hazardous
- Tolerant of most oils, acids, and solvents
- Flexible and recyclable
- Temperature range from -60 to 200°F

Colour:
- Standard colours are black and yellow

Part #	I.D. (in.)
SGW06	3/8
SGW08	1/2
SGW12	3/4
SGW16	1
SGW20	1 1/4
SGW24	1 1/2
SGW32	2
SGW40	2 1/2
SGW48	3
SGW56	3 1/2
SGW64	4
SGW80	5
SGW88	5 1/2

"Air King" Universal Couplings - Hose Ends

Size	Plated Iron	Brass	Stainless Steel
3/8	DAMH	DABH	DRAMH
1/2	DAM1	DAB1	DRAM1
5/8	DAM5	-	-
3/4	DAM6	DAB6	DRAM6
1	DAM11	DAB11	DRAM11

"Air King" Universal Couplings - Male NPT Ends

Size	Plated Iron	Brass	Stainless Steel
1/4	DAMB1	DABB1	-
3/8	DAMB	DABB	DRAMB
1/2	DAM2	DAB2	DRAM2
3/4	DAM7	DAB7	DRAM7
1	DAM12	DAB12	DRAM12

"Air King" Universal Couplings - Female NPT Ends

Size	Plated Iron	Brass	Stainless Steel
1/4	DAMC1	DABC1	-
3/8	DAMC	DABC	DRAMC
1/2	DAM3	DAB3	DRAM3
3/4	DAM8	DAB8	DRAM8
1	DAM13	DAB13	DRAM13

"Air King" Universal Couplings - Blank Ends

Plated Iron	Brass	Stainless Steel
DAM0	DAB0	DRAM0

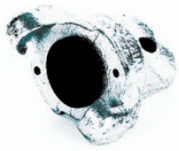

"Air King" - Lanyards

Part #
ACL8

"Air King" - Safety Clips

Material	Part #
Steel Stainless Steel	DAC1 DAC7

"Air King" - Washers

Material	Part #
Rubber Neoprene	DAWR4 DAWS6

Industrial Quick Disonnect Steel Air Couplings

Female Disconnect X Female NPT

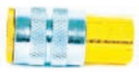

Part #	Type	Body Size	Thread Size
2FF2	Coupler	1/4	1/4
DC26	Coupler	3/8	3/8
DC10	Coupler	1/2	1/2

Male Disconnect X Female NPT

Part #	Type	Body Size	Thread Size
DCP20	Nipple	1/4	1/4
DCP2622	Nipple	3/8	3/8
DCP18	Nipple	1/2	1/2

Female Disconnect X Male NPT

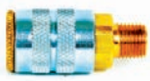

Part #	Type	Body Size	Thread Size
2FM2	Coupler	1/4	1/4
DC25	Coupler	3/8	3/8
DC9	Coupler	1/2	1/2

Male Disconnect X Male NPT

Part #	Type	Body Size	Thread Size
DCP21	Nipple	1/4	1/4
DCP25	Nipple	3/8	3/8
DCP17	Nipple	1/2	1/2

Female Disconnect X Barb Coupler

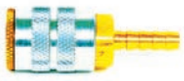

Part #	Type	Body Size	Thread Size
2FS2	Coupler	1/4	1/4
DC2644	Coupler	3/8	3/8
DC1045	Coupler	1/2	1/2

Male Disconnect X Barb Coupler

Part #	Type	Body Size	Thread Size
DCP2142	Nipple	1/4	1/4
DCP2544	Nipple	3/8	3/8
DCP1745	Nipple	1/2	1/2

Safety Blow Gun

- Blow gun body is designed to comfortably fit the contour of the hand, minimizing user fatigue
- Large lever with black vinyl grip further adds to the ergonomic design and allows for easy air flow activation
- Recessed internal slotted screw allows easy access to valve assembly for repairs or replacement
- Chrome plated zinc die cast body, nickel plated steel lever, vinyl thumb grip, stainless steel spring, brass valve, Buna-N seals and nickel plated brass tip combine for superior corrosion resistance as well as a contemporary look
- 1/4" female NPT inlet

Part #
D204-30

Pistol Grip Blow Gun

- Slender 4" extended nozzle allows access to hard to reach places as small as 0.200"
- Pressure rating - 150PSI
- Variable output trigger enables user to control air flow
- Hook design near trigger provides finger protection as well as easy storage
- Lightweight to help minimize user fatigue
- Side hole allow air to escape if nozzle tip is dead-ended, thus preventing back pressure build up
- 1/4"Female NPT inlet

Part #
ENBG1

Tire Inflator Gauge

- Tire gauge for passenger cars
- Has 12" hose with straight-on chuck
- Straight chuck nut fits wheel cover holes on cars and light trucks
- Ideal for use on wells and reels
- Calibrated in 2 PSI increments from 10 to 90 PSI

Part #
D150

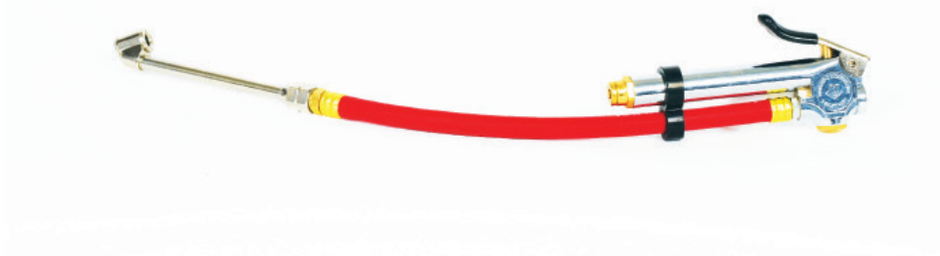

Basic Standard Parts

A Adapter
Adapter X
Female NPT Thread
Sizes: 1/2″ to 12″

E Adapter
Adapter X
Hose Shank
Sizes: 1/2″ to 12″

B Coupler
Coupler X
Male NPT Thread
Sizes: 1/2″ to 12″

F Adapter
Adapter X
Male NPT Thread
Sizes: 1/2″ to 12″

C Coupler
Coupler X
Hose Shank
Sizes: 1/2″ to 12″

DC Adapter
Dust Cap
Sizes: 1/2″ to 12″

D Coupler
Coupler X Female
NPT Thread
Sizes: 1/2″ to 12″

DP Adapter
Dust Plug
Sizes: 1/2″ to 12″

Reducers

CXA
Coupler X Adapter
Sizes: 1″ x 3/4″ to
8″ x 6″

SA Spool Adapter
Adapter X Adapter
Sizes: 1/2″ x 1/2″ to
6″ x 8″

Gaskets

Camlock

Size	Buna-N	Viton Green	Buna-N Thick 5/16"	Buna-N Thin 1/8"	Buna-N Hot Oil	EPT	Neoprene	White Food
1/2	G050BU	G050VT	G050BUTHK	G050BUTN	G050BUH	G050EPT	G050NE	G050WBU
3/4	G075BU	G075VT	G075BUTHK	G075BUTN	G075BUH	G075EPT	G075NE	G075WBU
1	G100BU	G100VT	G100BUTHK	G100BUTN	G100BUH	G100EPT	G100NE	G100WBU
1 1/4	G125BU	G125VT	G125BUTHK	G125BUTN	G125BUH	G125EPT	G125NE	G125WBU
1 1/2	G150BU	G150VT	G150BUTHK	G150BUTN	G150BUH	G150EPT	G150NE	G150WBU
2	G200BU	G200VT	G200BUTHK	G200BUTN	G200BUH	G200EPT	G200NE	G200WBU
2 1/2	G250BU	G250VT	G250BUTHK	G250BUTN	G250BUH	G250EPT	G250NE	G250WBU
3	G300BU	G300VT	G300BUTHK	G300BUTN	G300BUH	G300EPT	G300NE	G300WBU
4	G400BU	G400VT	G400BUTHK	G400BUTN	G400BUH	G400EPT	G400NE	G400WBU
6	G600BU	G600VT	G600BUTHK	G600BUTN	G600BUH	G600EPT	G600NE	G600WBU
8	G800BU	G800VT	G800BUTHK	G800BUTN	G800BUH	G800EPT	G800NE	G800WBU

Size	Envelope PTFE c/w Buna Filler	Envelope PTFE c/w Viton Filler	Encapsulated PTFE/Silicone	Encapsulated PTFE/Viton	Paper Thick	Paper Thin	Silicone	Santo-prene
1/2	G050BTENV	G050VTENV	G050TFENCAPSIL	G050TFENCAPVT	G050PA-TK	G050PA	G050SI	G050SA
3/4	G075BTENV	G075VTENV	G075TFENCAPSIL	G075TFENCAPVT	G075PA-TK	G075PA	G075SI	G075SA
1	G100BTENV	G100VTENV	G100TFENCAPSIL	G100TFENCAPVT	G100PA-TK	G100PA	G100SI	G100SA
1 1/4	G125BTENV	G125VTENV	G125TFENCAPSIL	G125TFENCAPVT	G125PA-TK	G125PA	G125SI	G125SA
1 1/2	G150BTENV	G150VTENV	G150TFENCAPSIL	G150TFENCAPVT	G150PA-TK	G150PA	G150SI	G150SA
2	G200BTENV	G200VTENV	G200TFENCAPSIL	G200TFENCAPVT	G200PA-TK	G200PA	G200SI	G200SA
2 1/2	G250BTENV	G250VTENV	G250TFENCAPSIL	G250TFENCAPVT	G250PA-TK	G250PA	G250SI	G250SA
3	G300BTENV	G300VTENV	G300TFENCAPSIL	G300TFENCAPVT	G300PA-TK	G300PA	G300SI	G300SA
4	G400BTENV	G400VTENV	G400TFENCAPSIL	G400TFENCAPVT	G400PA-TK	G400PA	G400SI	G400SA
6	G600BTENV	G600VTENV	G600TFENCAPSIL	G600TFENCAPVT	G600PA-TK	G600PA	G600SI	G600SA
8	G800BTENV	G800VTENV	G800TFENCAPSIL	G800TFENCAPVT	G800PA-TK	G800PA	G800SI	G800SA

ANSI 150# Flange

Size	Teflon Envelope	PTFE Ring 1/8" Thick	PTFE Full Face 1/8" Thick	Red Rubber 1/8" Thick	Viton Black 1/4" Thick
1/2	G050TFEN018FLFF	G050TR	G050TFENVFLFF	G050RRFF	G050VFF1/4
3/4	G075TFEN018FLFF	G075TR	G075TFENVFLFF	G075RRFF	G075VFF1/4
1	G100TFEN018FLFF	G100TR	G100TFENVFLFF	G100RRFF	G100VFF1/4
1 1/4	G125TFEN018FLFF	G125TR	G125TFENVFLFF	G125RRFF	G125VFF1/4
1 1/2	G150TFEN018FLFF	G150TR	G150TFENVFLFF	G150RRFF	G150VFF1/4
2	G200TFEN018FLFF	G200TR	G200TFENVFLFF	G200RRFF	G200VFF1/4
2 1/2	G250TFEN018FLFF	G250TR	G250TFENVFLFF	G250RRFF	G250VFF1/4
3	G300TFEN018FLFF	G300TR	G300TFENVFLFF	G300RRFF	G300VFF1/4
4	G400TFEN018FLFF	G400TR	G400TFENVFLFF	G400RRFF	G400VFF1/4
6	G600TFEN018FLFF	G600TR	G600TFENVFLFF	G600RRFF	G600VFF1/4
8	G800TFEN018FLFF	G800TR	G800TFENVFLFF	G800RRFF	G800VFF1/4

Cam Couplings - Domestic A

PART A

Size	Aluminum	Bronze	Ductile Iron	Stainless Steel	Polypropylene
1/2	DAL050A	DBZ050A	DDI050A	DSS050A	-
3/4	DAL075A	DBZ075A	DDI075A	DSS075A	DPP075A
1	DAL100A	DBZ100A	DDI100A	DSS100A	DPP100A
1 1/4	DAL125A	DBZ125A	DDI125A	DSS125A	DPP125A
1 1/2	DAL150A	DBZ150A	DDI150A	DSS150A	DPP150A
2	DAL200A	DBZ200A	DDI200A	DSS200A	DPP200A
2 1/2	DAL250A	DBZ250A	DDI250A	DSS250A	-
3	DAL300A	DBZ300A	DDI300A	DSS300A	DPP300A
4	DAL400A	DBZ400A	DDI400A	DSS400A	DPP400A
5	DAL500A	DBZ500A	DDI500A	DSS500A	-
6	DAL600A	DBZ600A	DDI600A	DSS600A	-
8	DAL800A	DBZ800A	DDI800A	DSS800A	-

Cam Couplings - Domestic B

PART B

Size	Aluminum	Bronze	Ductile Iron	Stainless Steel	Polypropylene
1/2	DAL050B	DBZ050B	DDI050B	DSS050B	-
3/4	DAL075B	DBZ075B	DDI075B	DSS075B	DPP075B
1	DAL100B	DBZ100B	DDI100B	DSS100B	DPP100B
1 1/4	DAL125B	DBZ125B	DDI125B	DSS125B	DPP125B
1 1/2	DAL150B	DBZ150B	DDI150B	DSS150B	DPP150B
2	DAL200B	DBZ200B	DDI200B	DSS200B	DPP200B
2 1/2	DAL250B	DBZ250B	DDI250B	DSS250B	-
3	DAL300B	DBZ300B	DDI300B	DSS300B	DPP300B
4	DAL400B	DBZ400B	DDI400B	DSS400B	DPP400B
5	DAL500B	DBZ500B	DDI500B	DSS500B	-
6	DAL600B	DBZ600B	DDI600B	DSS600B	-
8	DAL800B	DBZ800B	DDI800B	DSS800B	-

Cam Couplings - Domestic C

PART C

Size	Aluminum	Bronze	Ductile Iron	Stainless Steel	Polypropylene
1/2	DAL050C	DAL050C	DDI050C	DSS050C	-
3/4	DAL075C	DBZ075C	DDI075C	DSS075C	DPP075C
1	DAL100C	DBZ100C	DDI100C	DSS100C	DPP100C
1 1/4	DAL125C	DBZ125C	DDI125C	DSS125C	DPP125C
1 1/2	DAL150C	DBZ150C	DDI150C	DSS150C	DPP150C
2	DAL200C	DBZ200C	DDI200C	DSS200C	DPP200C
2 1/2	DAL250C	DBZ250C	DDI250C	DSS250C	-
3	DAL300C	DBZ300C	DDI300C	DSS300C	DPP300C
4	DAL400C	DBZ400C	DDI400C	DSS400C	DPP400C
5	DAL500C	DBZ500C	DDI500C	DSS500C	-
6	DAL600C	DBZ600C	DDI600C	DSS600C	-
8	DAL800C	DBZ800C	DDI800C	DSS800C	-

Cam Couplings - Domestic D

Size	Aluminum	Bronze	Ductile Iron	Stainless Steel	Polypropylene
1/2	DAL050D	DBZ050D	DDI050D	DSS050D	-
3/4	DAL075D	DBZ075D	DDI075D	DSS075D	DPP075D
1	DAL100D	DBZ100D	DDI100D	DSS100D	DPP100D
1 1/4	DAL125D	DBZ125D	DDI125D	DSS125D	DPP125D
1 1/2	DAL150D	DBZ150D	DDI150D	DSS150D	DPP150D
2	DAL200D	DBZ200D	DDI200D	DSS200D	DPP200D
2 1/2	DAL250D	DBZ250D	DDI250D	DSS250D	-
3	DAL300D	DBZ300D	DDI300D	DSS300D	DPP300D
4	DAL400D	DBZ400D	DDI400D	DSS400D	DPP400D
5	DAL500D	DBZ500D	DDI500D	DSS500D	-
6	DAL600D	DBZ600D	DDI600D	DSS600D	-
8	DAL800D	DBZ800D	DDI800D	DSS800D	-

PART D

Cam Couplings - Domestic E

Size	Aluminum	Bronze	Ductile Iron	Stainless Steel	Polypropylene
1/2	DAL050E	DBZ050E	DDI050E	DSS050E	-
3/4	DAL075E	DBZ075E	DDI075E	DSS075E	DPP075E
1	DAL100E	DBZ100E	DDI100E	DSS100E	DPP100E
1 1/4	DAL125E	DBZ125E	DDI125E	DSS125E	DPP125E
1 1/2	DAL150E	DBZ150E	DDI150E	DSS150E	DPP150E
2	DAL200E	DBZ200E	DDI200E	DSS200E	DPP200E
2 1/2	DAL250E	DBZ250E	DDI250E	DSS250E	-
3	DAL300E	DBZ300E	DDI300E	DSS300E	DPP300E
4	DAL400E	DBZ400E	DDI400E	DSS400E	DPP400E
5	DAL500E	DBZ500E	DDI500E	DSS500E	-
6	DAL600E	DBZ600E	DDI600E	DSS600E	-
8	DAL800E	DBZ800E	DDI800E	DSS800E	-

PART E

Cam Couplings - Domestic F

Size	Aluminum	Bronze	Ductile Iron	Stainless Steel	Polypropylene
1/2	DAL050F	DBZ050F	DDI050F	DSS050F	-
3/4	DAL075F	DBZ075F	DDI075F	DSS075F	DPP075F
1	DAL100F	DBZ100F	DDI100F	DSS100F	DPP100F
1 1/4	DAL125F	DBZ125F	DDI125F	DSS125F	DPP125F
1 1/2	DAL150F	DBZ150F	DDI150F	DSS150F	DPP150F
2	DAL200F	DBZ200F	DDI200F	DSS200F	DPP200F
2 1/2	DAL250F	DBZ250F	DDI250F	DSS250F	-
3	DAL300F	DBZ300F	DDI300F	DSS300F	DPP300F
4	DAL400F	DBZ400F	DDI400F	DSS400F	DPP400F
5	DAL500F	DBZ500F	DDI500F	DSS500F	-
6	DAL600F	DBZ600F	DDI600F	DSS600F	-
8	DAL800F	DBZ800F	DDI800F	DSS800F	-

PART F

Dust Plugs - Domestic

PART DP

Size	Aluminum	Bronze	Ductile Iron	Stainless Steel	Polypropylene
1/2	DAL050DP	DBZ050DP	DDI050DP	DSS050DP	-
3/4	DAL075DP	DBZ075DP	DDI075DP	DSS075DP	DPP075DP
1	DAL100DP	DBZ100DP	DDI100DP	DSS100DP	DPP100DP
1 1/4	DAL125DP	DBZ125DP	DDI125DP	DSS125DP	DPP125DP
1 1/2	DAL150DP	DBZ150DP	DDI150DP	DSS150DP	DPP150DP
2	DAL200DP	DBZ200DP	DDI200DP	DSS200DP	DPP200DP
2 1/2	DAL250DP	DBZ250DP	DDI250DP	DSS250DP	DPP250DP
3	DAL300DP	DBZ300DP	DDI300DP	DSS300DP	DPP300DP
4	DAL400DP	DBZ400DP	DDI400DP	DSS400DP	DPP400DP
5	DAL500DP	DBZ500DP	DDI500DP	DSS500DP	-
6	DAL600DP	DBZ600DP	DDI600DP	DSS600DP	-
8	DAL800DP	DBZ800DP	DDI800DP	DSS800DP	-

Dust Caps - Domestic

PART DC

Size	Aluminum	Bronze	Ductile Iron	Stainless Steel	Polypropylene
1/2	DAL050DC	DBZ050DC	DDI050DC	DSS050DC	-
3/4	DAL075DC	DBZ075DC	DDI075DC	DSS075DC	DPP075DC
1	DAL100DC	DBZ100DC	DDI100DC	DSS100DC	DPP100DC
1 1/4	DAL125DC	DBZ125DC	DDI125DC	DSS125DC	DPP125DC
1 1/2	DAL150DC	DBZ150DC	DDI150DC	DSS150DC	DPP150DC
2	DAL200DC	DBZ200DC	DDI200DC	DSS200DC	DPP200DC
2 1/2	DAL250DC	DBZ250DC	DDI250DC	DSS250DC	DPP250DC
3	DAL300DC	DBZ300DC	DDI300DC	DSS300DC	DPP300DC
4	DAL400DC	DBZ400DC	DDI400DC	DSS400DC	DPP400DC
5	DAL500DC	DBZ500DC	DDI500DC	DSS500DC	-
6	DAL600DC	DBZ600DC	DDI600DC	DSS600DC	-
8	DAL800DC	DBZ800DC	DDI800DC	DSS800DC	-

Spool Couplers - Domestic

Coupler Size	Coupler Size	Aluminum	Bronze	Stainless Steel
2	2	DAL2020BB	DBZ2020BB	DSS2020BB
3	3	DAL3030BB	DBZ3030BB	DSS3030BB
3	2	DAL3020BB	DBZ3020BB	DSS3020BB
3	4	DAL3040BB	DBZ3040BB	DSS3040BB
4	4	DAL4040BB	DBZ4040BB	DSS4040BB
6	6	DAL6060BB	-	DSS6060BB

Lockable Dust Caps - Domestic

DAL400DCL

Size	Aluminum	Bronze	Stainless Steel
2	DAL200DCL	DBZ200DCL	DSS200DCL
3	DAL300DCL	DBZ300DCL	DSS300DCL
4	DAL400DCL	DBZ400DCL	DSS400DCL
6	DAL600DCL	DBZ600DCL	DSS600DCL

Ontario Hose Specialties Limited ¢ Tel: 905 670-0113 ¢ Fax: 905 670-4958 ¢ web: www.ontariohose.com

Reducing Couplers x Adapters - Domestic

Coupler Size	Adapter Size	Aluminum	Bronze	Stainless Steel
1	1 1/2	DAL1015BA	-	DSS1015BA
1 1/2	1	DAL1510BA	-	DSS1510BA
1 1/2	2	DAL1520BA	DBZ1520BA	DSS1520BA
2	1	DAL2010BA	DBZ2010BA	DSS2010BA
2	1 1/2	DAL2015BA	DBZ2015BA	DSS2015BA
2	2 1/2	DAL2025BA	-	DSS2025BA
2	3	-	DBZ2030BA	-
2	4	DAL2040BA	DBZ2040BA	DSS2040BA
2 1/2	2	DAL2520BA	DBZ2520BA	DSS2520BA
2 1/2	3	DAL2530BA	DBZ2530BA	DSS2530BA
3	1 1/2	DAL3015BA	DBZ3015BA	DSS3015BA
3	2	DAL3020BA	DBZ3020BA	DSS3020BA
3	2 1/2	DAL3025BA	DBZ3025BA	DSS3025BA
3	4	DAL3040BA	DBZ3040BA	DSS3040BA
4	2	DAL4020BA	-	DSS4020BA
4	2 1/2	DAL4025BA	DBZ4025BA	DSS4025BA
4	3	DAL4030BA	DBZ4030BA	DSS4030BA
4	5	DAL4050BA	-	DSS4050BA
4	6	DAL4060BA	-	DSS4060BA
5	3	DAL5030BA	-	DSS5030BA
5	4	DAL5040BA	DBZ5040BA	DSS5040BA
5	6	DAL5060BA	-	DSS5060BA
6	3	DAL6030BA	-	DSS6030BA
6	4	DAL6040BA	DBZ6040BA	DSS6040BA
6	5	DAL6050BA	-	DSS6050BA
8	6	DAL8060BA	-	DSS8060BA

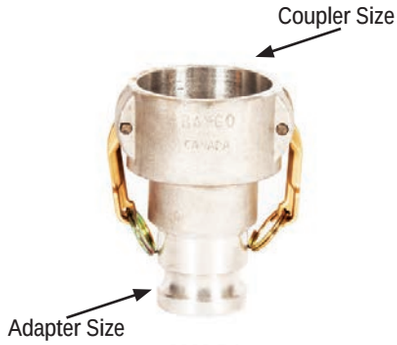

3020 BA

4030 BA

Spool Adapters - Domestic

Adapter Size	Adapter Size	Aluminum	Bronze	Stainless Steel
1	1	DAL1010AA	DBZ1010AA	DSS1010AA
1 1/4	1 1/4	DAL125AA	DBZ125AA	DSS125AA
1 1/2	1 1/2	DAL150AA	DBZ150AA	DSS150AA
1 1/2	2	DAL1520AA	DBZ1520AA	DSS1520AA
2	2	DAL2020AA	DBZ2020AA	DSS2020AA
2	3	DAL2030AA	DBZ2030AA	DSS2030AA
2	4	DAL2040AA	-	DSS2040AA
2 1/2	3	DAL2530AA	DBZ2530AA	DSS2530AA
2 1/2	4	DAL2540AA	DBZ2540AA	DSS2540AA
3	3	DAL3030AA	DBZ3030AA	DSS3030AA
3	4	DAL3040AA	DBZ3040AA	-
4	4	DAL4040AA	DBZ4040AA	DSS4040AA
4	5	DAL4050AA	-	-
4	6	DAL4060AA	DBZ4060AA	DSS4060AA
5	5	DAL5050AA	DBZ5050AA	DSS5050AA
5	6	DAL5060AA	-	-
6	6	DAL6060AA	DBZ6060AA	DSS6060AA

4030 AA

Cam Couplings - Import A

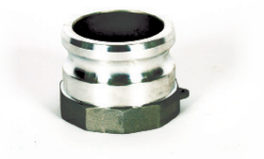

PART A

Size	Aluminum	Bronze	Ductile Iron	Stainless Steel	Polypropylene
1/2	IAL050A	IBZ050A	ICI050A	ISS050A	IPP050A
3/4	IAL075A	IBZ075A	ICI075A	ISS075A	IPP075A
1	IAL100A	IBZ100A	ICI100A	ISS100A	IPP100A
1 1/4	IAL125A	IBZ125A	ICI125A	ISS125A	IPP125A
1 1/2	IAL150A	IBZ150A	ICI150A	ISS150A	IPP150A
2	IAL200A	IBZ200A	ICI200A	ISS200A	IPP200A
2 1/2	IAL250A	IBZ250A	-	ISS250A	-
3	IAL300A	IBZ300A	ICI300A	ISS300A	IPP300A
4	IAL400A	IBZ400A	ICI400A	ISS400A	IPP400A
5	IAL500A	IBZ500A	-	ISS500A	-
6	IAL600A	IBZ600A	-	ISS600A	-
8	IAL800A	-	-	ISS800A	-

Cam Couplings - Import B

PART B

Size	Aluminum	Bronze	Ductile Iron	Stainless Steel	Polypropylene
1/2	IAL050B	IBZ050B	ICI050B	ISS050B	IPP050B
3/4	IAL075B	IBZ075B	ICI075B	ISS075B	IPP075B
1	IAL100B	IBZ100B	ICI100B	ISS100B	IPP100B
1 1/4	IAL125B	IBZ125B	ICI125B	ISS125B	IPP125B
1 1/2	IAL150B	IBZ150B	ICI150B	ISS150B	IPP150B
2	IAL200B	IBZ200B	ICI200B	ISS200B	IPP200B
2 1/2	IAL250B	IBZ250B	-	ISS250B	-
3	IAL300B	IBZ300B	ICI300B	ISS300B	IPP300B
4	IAL400B	IBZ400B	ICI400B	ISS400B	IPP400B
5	IAL500B	IBZ500B	-	ISS500B	-
6	IAL600B	IBZ600B	-	ISS600B	-
8	IAL800B	-	-	-	-

Cam Couplings - Import C

PART C

Size	Aluminum	Bronze	Ductile Iron	Stainless Steel	Polypropylene
1/2	IAL050C	IBZ050C	ICI050C	ISS050C	IPP050C
3/4	IAL075C	IBZ075C	ICI075C	ISS075C	IPP075C
1	IAL100C	IBZ100C	ICI100C	ISS100C	IPP100C
1 1/4	IAL125C	IBZ125C	ICI125C	ISS125C	IPP125C
1 1/2	IAL150C	IBZ150C	ICI150C	ISS150C	IPP150C
2	IAL200C	IBZ200C	ICI200C	ISS200C	IPP200C
2 1/2	IAL250C	IBZ250C	-	ISS250C	-
3	IAL300C	IBZ300C	ICI300C	ISS300C	IPP300C
4	IAL400C	IBZ400C	ICI400C	ISS400C	IPP400C
5	IAL500C	IBZ500C	-	ISS500C	-
6	IAL600C	IBZ600C	-	ISS600C	-
8	IAL800C	-	-	-	-

Cam Couplings - Import D

Size	Aluminum	Bronze	Ductile Iron	Stainless Steel	Polypropylene
1/2	IAL050D	IBZ050D	ICI050D	ISS050D	IPP050D
3/4	IAL075D	IBZ075D	ICI075D	ISS075D	IPP075D
1	IAL100D	IBZ100D	ICI100D	ISS100D	IPP100D
1 1/4	IAL125D	IBZ125D	ICI125D	ISS125D	IPP125D
1 1/2	IAL150D	IBZ150D	ICI150D	ISS150D	IPP150D
2	IAL200D	IBZ200D	ICI200D	ISS200D	IPP200D
2 1/2	IAL250D	IBZ250D	-	ISS250D	-
3	IAL300D	IBZ300D	ICI300D	ISS300D	IPP300D
4	IAL400D	IBZ400D	ICI400D	ISS400D	IPP400D
5	IAL500D	IBZ500D	-	ISS500D	-
6	IAL600D	IBZ600D	-	ISS600D	-
8	IAL800D	-	-	ISS800D	-

PART D

Cam Couplings - Import E

Size	Aluminum	Bronze	Ductile Iron	Stainless Steel	Polypropylene
1/2	IAL050E	IBZ050E	ICI050E	ISS050E	IPP050E
3/4	IAL075E	IBZ075E	ICI075E	ISS075E	IPP075E
1	IAL100E	IBZ100E	ICI100E	ISS100E	IPP100E
1 1/4	IAL125E	IBZ125E	ICI125E	ISS125E	IPP125E
1 1/2	IAL150E	IBZ150E	ICI150E	ISS150E	IPP150E
2	IAL200E	IBZ200E	ICI200E	ISS200E	IPP200E
2 1/2	IAL250E	IBZ250E	-	ISS250E	-
3	IAL300E	IBZ300E	ICI300E	ISS300E	IPP300E
4	IAL400E	IBZ400E	ICI400E	ISS400E	IPP400E
5	IAL500E	IBZ500E	-	ISS500E	-
6	IAL600E	IBZ600E	-	ISS600E	-
8	IAL800E	-	-	ISS800E	-

PART E

Cam Couplings - Import F

Size	Aluminum	Bronze	Ductile Iron	Stainless Steel	Polypropylene
1/2	IAL050F	IBZ050F	ICI050F	ISS050F	IPP050F
3/4	IAL075F	IBZ075F	ICI075F	ISS075F	IPP075F
1	IAL100F	IBZ100F	ICI100F	ISS100F	IPP100F
1 1/4	IAL125F	IBZ125F	ICI125F	ISS125F	IPP125F
1 1/2	IAL150F	IBZ150F	ICI150F	ISS150F	IPP150F
2	IAL200F	IBZ200F	ICI200F	ISS200F	IPP200F
2 1/2	IAL250F	IBZ250F	-	ISS250F	-
3	IAL300F	IBZ300F	ICI300F	ISS300F	IPP300F
4	IAL400F	IBZ400F	ICI400F	ISS400F	IPP400F
5	IAL500F	IBZ500F	-	ISS500F	-
6	IAL600F	IBZ600F	-	ISS600F	-
8	IAL800F	-	-	ISS800F	-

PART F

Dust Plugs - Import

PART DP

Size	Aluminum	Bronze	Ductile Iron	Stainless Steel	Polypropylene
1/2	IAL050DP	IBZ050DP	ICI050DP	ISS050DP	IPP050DP
3/4	IAL075DP	IBZ075DP	ICI075DP	ISS075DP	IPP075DP
1	IAL100DP	IBZ100DP	ICI100DP	ISS100DP	IPP100DP
1 1/4	IAL125DP	IBZ125DP	ICI125DP	ISS125DP	IPP125DP
1 1/2	IAL150DP	IBZ150DP	ICI150DP	ISS150DP	IPP150DP
2	IAL200DP	IBZ200DP	ICI200DP	ISS200DP	IPP200DP
2 1/2	IAL250DP	IBZ250DP	-	ISS250DP	IPP250DP
3	IAL300DP	IBZ300DP	ICI300DP	ISS300DP	IPP300DP
4	IAL400DP	IBZ400DP	ICI400DP	ISS400DP	IPP400DP
5	IAL500DP	IBZ500DP	-	ISS500DP	-
6	IAL600DP	IBZ600DP	ICI600DP	ISS600DP	-
8	IAL800DP	-	-	ISS800DP	-

Dust Caps - Import

PART DC

Size	Aluminum	Bronze	Ductile Iron	Stainless Steel	Polypropylene
1/2	IAL050DC	IBZ050DC	ICI050DC	ISS050DC	IPP050DC
3/4	IAL075DC	IBZ075DC	ICI075DC	ISS075DC	IPP075DC
1	IAL100DC	IBZ100DC	ICI100DC	ISS100DC	IPP100DC
1 1/4	IAL125DC	IBZ125DC	ICI125DC	ISS125DC	IPP125DC
1 1/2	IAL150DC	IBZ150DC	ICI150DC	ISS150DC	IPP150DC
2	IAL200DC	IBZ200DC	ICI200DC	ISS200DC	IPP200DC
2 1/2	IAL250DC	IBZ250DC	-	ISS250DC	IPP250DC
3	IAL300DC	IBZ300DC	ICI300DC	ISS300DC	IPP300DC
4	IAL400DC	IBZ400DC	ICI400DC	ISS400DC	IPP400DC
5	IAL500DC	IBZ500DC	-	ISS500DC	-
6	IAL600DC	IBZ600DC	ICI600DC	ISS600DC	-
8	IAL800DC	-	-	ISS800DC	-

Spool Couplers - Import

Coupler Size	Coupler Size	Aluminum	Bronze	Stainless Steel
2	2	IAL2020BB	-	ISS2020BB
3	3	IAL3030BB	-	ISS3030BB
3	2	IAL3020BB	-	ISS3020BB
3	4	IAL3040BB	-	-
4	4	IAL4040BB	-	ISS4040BB
6	6	-	-	-

Lockable Dust Caps - Import

IAL400DCL

Size	Aluminum	Bronze	Stainless Steel
2	IAL200DCL	-	ISS200DCL
3	IAL300DCL	-	ISS300DCL
4	IAL400DCL	-	ISS400DCL
6	IAL600DCL	-	ISS600DCL

Reducing Couplers x Adapters - Import

Coupler Size	Adapter Size	Aluminum	Bronze	Stainless Steel
1	1 1/2	-	-	-
1 1/2	1	IAL1510BA	-	-
1 1/2	2	IAL1520BA	-	-
2	1	-	-	-
2	1 1/2	IAL2015BA	-	-
2	2 1/2	-	-	-
2	3	IAL2030BA	IBZ2030BA	ISS2030BA
2	4	IAL2040BA	-	-
2 1/2	2	-	-	ISS2520BA
2 1/2	3	-	-	-
3	1 1/2	IAL3015BA	-	-
3	2	IAL3020BA	IBZ3020BA	ISS3020BA
3	2 1/2	IAL3025BA	-	-
3	4	IAL3040BA	-	-
4	2	IAL4020BA	IBZ4020BA	-
4	2 1/2	-	-	-
4	3	IAL4030BA	IBZ4030BA	ISS4030BA
4	5	-	-	-
4	6	IAL4060BA	-	-
5	3	-	-	-
5	4	-	-	-
5	6	-	-	-
6	3	-	-	-
6	4	IAL6040BA	IBZ6040BA	ISS6040BA
6	5	IAL6050BA	-	-
8	6	-	-	-

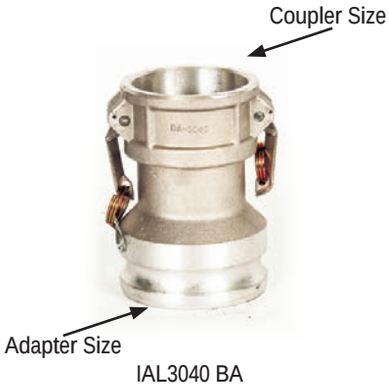

IAL3040 BA

IAL4020 BA

Spool Adapters - Import

Adapter Size	Adapter Size	Aluminum	Bronze	Stainless Steel
1	1	IAL1010AA	-	ISS1010AA
1 1/4	1 1/4	-	-	ISS125AA
1 1/2	1 1/2	IAL150AA	IBZ150AA	ISS150AA
1 1/2	2	-	-	ISS1520AA
2	2	IAL2020AA	IBZ2020AA	ISS2020AA
2	3	IAL2030AA	-	ISS2030AA
2	4	-	-	-
2 1/2	3	-	-	-
2 1/2	4	-	-	-
3	3	IAL3030AA	IBZ3030AA	ISS3030AA
3	4	IAL3040AA	-	ISS3040AA
4	4	IAL4040AA	IBZ4040AA	ISS4040AA
4	5	-	-	-
4	6	IAL4060AA	-	ISS4060AA
5	5	-	-	-
5	6	-	IBZ5060AA	-
6	6	IAL6060AA	-	-

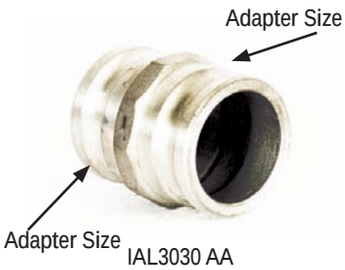

IAL3030 AA

Stainless Steel Cam Locks - Locking (Part D shown)

Dixon EZ Boss-Lock

Size	B	C	D
1	RB100EZ	-	-
1 1/2	RB150EZ	-	RD150EZ
2	RB200EZ	-	RD200EZ
3	RB300EZ	RC300EZ	-
4	-	-	RD400EZ
6	-	-	RD600EZ

Neco Double-Lok

Size	C	D
2	ISS200CL	ISS200DL
3	ISS300CL	ISS300DL

PT Sta-Lok II

Size	C	D
1	PSS100CSL2	PSS100DSL2
2	PSS200CSL2	PSS200DSL2

OPW Autolok

Size	B	C	D
1/2	-	-	733SS050DAL
3/4	733SS075BAL	733SS075CAL	733SS075DAL
1	733SS100BAL	733SS100CAL	733SS100DAL
1 1/4	-	733SS125CAL	-
1 1/2	733SS150BAL	733SS150CAL	733SS150DAL
2	733SS200BAL	733SS200CAL	733SS200DAL
3	-	733SS300CAL	733SS300DAL
4	733SS400BAL	733SS400CAL	733SS400DAL

Locking Cam Arms, Rings, and Pins

Dixon - Domestic

Type	Size	Brass	Stainless Steel
DC Locking Cam Arm	2″	DBZ20XL	-
DC Locking Cam Arm	3″	DBZ30XL	-
DC Locking Cam Arm	4″	DBZ40XL	-
DC Locking Cam Arm	5″	DBZ50XL	-
DC Locking Cam Arm	6″	DBZ60XL	-
EZ-Lock Assy	1 1/4″ - 2 1/2″	-	RHEZ152
EZ-Lock Assy	3″ - 4″	-	RHEZ34
Boss Lock Arm	1 1/4″ - 2 1/2″	-	RHSC152
Boss Lock Arm	3″ - 4″	-	RHSC34
Boss Lock Arm	1 1/4″ - 2 1/2″	BHSC152	-

DBZ50XL

RHEZ34

PT - Domestic

Type	Size	Part#
Sta-Lok II Arm Assy	1″	SLS11
Sta-Lok II Arm Assy	1 1/2″	SLS15
Sta-Lok II Arm Assy	1 1/4″ - 2 1/2″	SLS20
Sta-Lok II Arm Assy	3″ - 5″	SLS30

Can be used to retrofit standard Cam and groove fittings to locking fittings

SLS20

Import

Type	Size	Brass	Stainless Steel
Arm Assy	1 1/14″ - 2 1/2″	-	NSSCA1525
Arm Assy	3″ - 4″	-	NSSCA3040
Arm Assy	2″	-	NSSCA1525DBL
Arm Assy	3″	-	NSSCA3040DBL
Arm	2″	-	ISSCAL1525
Arm Assy	3″ - 5″	-	ISSCAL3040
Arm Assy	6″	-	ISSCAL600

NSSCA1525

NSSCA3040DBL

ISSCAL3040

Cam Arms, Rings, and Pins

Dixon - Domestic

DBZCA3040

Type	Size	Brass	Stainless Steel
Arm & Ring	3/4″	DBZCA075	-
Arm & Ring	1″	DBZCA1125	-
Arm & Ring	1 1/4″ - 2 1/2″	DBZCA1525	-
Arm & Ring	3″ - 5″	DBZCA3040	-
Arm & Ring	6″	DBZCA600	-
Arm & Ring	8″	DBZCA800	-
Ring	1″	-	DCIRCA100
Ring	1 3/4″	-	DCIRCA1525
Ring	2 3/4″	-	DCIRCA3040

Dixon and PT

DCICA3040

Type	Size	Brass	Stainless Steel
Arm Assy	3/4″	-	DCICA0750
Arm Assy	1″	-	DCICA1125
Arm & Ring	1 1/4″ - 2 1/2″	-	DCICA1525
Arm Assy	3″ - 5″	-	DCICA340
Arm & Ring	6″	-	DCICA600
Pin	1 1/4″ - 2 1/2″	-	DCIPCA1525
Pin	3″ - 4″	-	DCIPCA3040
Pin	3″ - 4″	-	DCIPCA3040H
Pin	-	-	DCIPCA500024
Pin	6″	-	DCIPCA600

Import

IBZCA1525

Type	Size	Brass	Stainless Steel
Arm-Ring-Pin	1 1/2″ & 2″	IBZCA1525	-
Arm-Ring-Pin	3″ - 5″	IBZCA3040	-
Arm-Ring-Pin	6″	IBZCA600	-

SPLIT PIN

PIN

RING

Adapters x 150# Flanged Drilling

Size	Aluminum	Stainless Steel
1	-	-
1 1/2	-	-
2	IAL200AFL	ISS200AFL
3	IAL300AFL	MSS300AFL
4	IAL400AFL	MSS400AFL

Adapter x Round Tank Truck Flange

Size	Aluminum	Stainless Steel
3	TTF30A-AL	TTF30A-SS
3 x 4	TTF30X40A-AL	-
4	TTF40A-AL	TTF40A-SS
6	TTF60A-AL	TTF60A-SS

Couplers x 150# Flanged Drilling

Size	Aluminum	Stainless Steel
1	-	-
1 1/2	-	-
2	PFC200AL	PFC200SS
3	PFC300AL	PFC300SS
4	PFC400AL	PFC400SS
6	PFC600AL	PFC600SS

Coupler x Round Tank Truck Flange

Size	Aluminum	Stainless Steel
3	DAL300DLT	DSS300DLT
3 x 4	DAL30x40DLT	-
4	DAL400DLT	DSS400DLT
6	DAL600DLT	DSS600DLT

Tank Truck Flange Gaskets (TTMA)

Gasket	Thickness	3″	4″	6″
Cork/Buna	1/8	10232B	10232C	-
Teflon Envelope with Klinger Filler	1/8	15313TFS	10100CBT	-
Viton	1/8	15313VT	15317VT	-
Durlon 8500	1/8	-	DUR8500TTMA400	-
Sump Klinger	1/8	10300DBT	15309TFS	-
Sump Viton	1/8	-	15309VT	G25507VT

Cork

Teflon

Railroad Tank Car Gaskets

Size	For Use With	Description	Part #	O.D.	I.D.	Thickness
5	Dixon	Buna N (Standard)	500GTCABU	5 1/4	3 7/8	1/8
5	Dixon	Viton	500GTCAVI	5 1/4	3 7/8	1/8
5	Dixon	Teflon with Buna N Filler	500GTCATF	5 1/4	3 13/16	3/16
5	Dixon	Teflon with Viton Filler	500GTCATV	5 1/4	3 13/16	3/16

Railroad Tank Car Connections - Style 'T'

Swivel Nut	Male NPT	Aluminum	Ductile Iron	Stainless Steel
5	3	ATCT30	TCT30	RTCT30
5	4	ATCT40	TCS40	RTCT40

*All sizes 20° below horizontal, except 3″ threaded, which is 30° below horizontal
**Style 'S' also available. Call for details.

Pipe Fittings

Carbon Steel Sch 40

Elbow 90

Size	Part #
1/4	MI90EL025
3/8	MI90EL038
1/2	MI90EL050
3/4	MI90EL075
1	MI90EL100
1 1/4	MI90EL125
1 1/2	MI90EL150
2	MI90EL200
2 1/2	MI90EL250
3	MI90EL300
4	MI90EL400
6	MI90EL600
8	MI90EL800

Elbow 45

Size	Part #
1/4	MI45EL025
3/8	MI45EL038
1/2	MI45EL050
3/4	MI45EL075
1	MI45EL100
1 1/4	MI45EL125
1 1/2	MI45EL150
2	MI45EL200
2 1/2	MI45EL250
3	MI45EL300
4	MI45EL400
6	MI45EL600
8	MI45EL800

Tee

Size	Part #
1/4	MITEE025
3/8	MITEE038
1/2	MITEE050
3/4	MITEE075
1	MITEE100
1 1/4	MITEE125
1 1/2	MITEE150
2	MITEE200
2 1/2	MITEE250
3	MITEE300
4	MITEE400
6	MITEE600
8	MITEE800

Street Elbow 90

Size	Part #
1/4	MI90SE025
3/8	MI90SE038
1/2	MI90SE050
3/4	MI90SE075
1	MI90SE100
1 1/4	MI90SE125
1 1/2	MI90SE150
2	MI90SE200
2 1/2	MI90SE250
3	MI90SE300
4	MI90SE400
6	MI90SE600
8	MI90SE800

Street Elbow 45

Size	Part #
1/4	MI45SE025
3/8	MI45SE038
1/2	MI45SE050
3/4	MI45SE075
1	MI45SE100
1 1/4	MI45SE125
1 1/2	MI45SE150
2	MI45SE200
2 1/2	MI45SE250
3	MI45SE300
4	MI45SE400
6	MI45SE600
8	MI45SE800

Square Plug

Size	Part #
1/4	MIPL025
3/8	MIPL038
1/2	MIPL050
3/4	MIPL075
1	MIPL100
1 1/4	MIPL125
1 1/2	MIPL150
2	MIPL200
2 1/2	MIPL250
3	MIPL300
4	MIPL400
6	MIPL600
8	MIPL800

Round Cap

Size	Part #
1/4	MICAP025
3/8	MICAP038
1/2	MICAP050
3/4	MICAP075
1	MICAP100
1 1/4	MICAP125
1 1/2	MICAP150
2	MICAP200
2 1/2	MICAP250
3	MICAP300
4	MICAP400
6	MICAP600
8	MICAP800

Union

Size	Part #
1/4	MIU025
3/8	MIU038
1/2	MIU050
3/4	MIU075
1	MIU100
1 1/4	MIU125
1 1/2	MIU150
2	MIU200
2 1/2	MIU250
3	MIU300
4	MIU400
6	MIU600
8	MIU800

Coupling

Size	Part #
1/4	MICP025
3/8	MICP038
1/2	MICP050
3/4	MICP075
1	MICP100
1 1/4	MICP125
1 1/2	MICP150
2	MICP200
2 1/2	MICP250
3	MICP300
4	MICP400
6	MICP600
8	MICP800

Half Coupling

Size	Part #
1/4	WSHC025
3/8	WSHC038
1/2	WSHC050
3/4	WSHC075
1	WSHC100
1 1/4	WSHC125
1 1/2	WSHC150
2	WSHC200
2 1/2	WSHC250
3	WSHC300
4	WSHC400
6	WSHC600
8	WSHC800

Pipe Fittings

Carbon Steel Nipples Sch 40

Close Nipple

Nipple

Pipe Size	Close Length	Close	1 1/2″	2″	2 1/2″	3″	4″	4 1/2″	5″
1/8	3/4	CSN013CL	CSN013150	CSN013200	CSN013250	CSN013300	CSN013400	CSN013450	CSN013500
1/4	7/8	CSN025CL	CSN025150	CSN025200	CSN025250	CSN025300	CSN025400	CSN025450	CSN025500
3/8	1	CSN038CL	CSN100150	CSN038200	CSN038250	CSN038300	CSN038400	CSN038450	CSN038500
1/2	1 1/8	CSN050CL	CSN050150	CSN050200	CSN050250	CSN050300	CSN050400	CSN050450	CSN050500
3/4	1 3/8	CSN075CL	CSN075150	CSN075200	CSN075250	CSN075300	CSN075400	CSN075450	CSN075500
1	1 1/2	CSN100CL	CSN100150	CSN100200	CSN100250	CSN100300	CSN100400	CSN100450	CSN100500
1 1/4	1 5/8	CSN125CL	CSN125150	CSN125200	CSN125250	CSN125300	CSN125400	CSN125450	CSN125500
1 1/2	1 3/4	CSN150CL	CSN150150	CSN150200	CSN150250	CSN150300	CSN150400	CSN150450	CSN150500
2	2	CSN200CL	-	CSN200200	CSN200250	CSN200300	CSN200400	CSN200450	CSN200500
2 1/2	2 1/2	CSN250CL	-	-	CSN250250	CSN250300	CSN250400	CSN250450	CSN250500
3	2 5/8	CSN300CL	-	-	-	CSN300300	CSN300400	CSN300450	CSN300500
3 1/2	2 3/4	CSN350CL	-	-	-	-	CSN350400	CSN350450	CSN350500
4	2 7/8	CSN400CL	-	-	-	-	CSN40040	CSN400450	CSN400500
6	3	CSN600CL	-	-	-	-	-	-	-
8	3 1/2	CSN800CL	-	-	-	-	-	-	-

Pipe Size	Close Length	5 1/2″	6″	7″	8″	9″	10″	11″	12″
1/8	3/4	CSN013550	CSN013600	CSN013700	CSN013800	CSN013900	CSN0131000	CSN0131100	CSN0131200
1/4	7/8	CSN025550	CSN025600	CSN025700	CSN025800	CSN025900	CSN0251000	CSN0251100	CSN0251200
3/8	1	CSN038550	CSN038600	CSN038700	CSN038800	CSN038900	CSN0381000	CSN0381100	CSN0381200
1/2	1 1/8	CSN050550	CSN050600	CSN050700	CSN050800	CSN050900	CSN0501000v	CSN0501100	CSN0501200
3/4	1 3/8	CSN075550	CSN075600	CSN075700	CSN075800	CSN075900	CSN0751000	CSN0751100	CSN0751200
1	1 1/2	CSN100550	CSN100600	CSN100700	CSN100800	CSN100900	CSN1001000	CSN1001100	CSN1001200
1 1/4	1 5/8	CSN125550	CSN125600	CSN125700	CSN125800	CSN125900	CSN1251000	CSN1251100	CSN1251200
1 1/2	1 3/4	CSN150550	CSN150600	CSN150700	CSN150800	CSN150900	CSN1501000	CSN1501100	CSN1501200
2	2	CSN200550	CSN200600	CSN200700	CSN200800	CSN200900	CSN2001000	CSN2001100	CSN2001200
2 1/2	2 1/2	CSN250550	CSN250600	CSN250700	CSN250800	CSN250900	CSN2501000	CSN2501100	CSN2501200
3	2 5/8	CSN300550	CSN300600	CSN300700	CSN300800	CSN300900	CSN3001000	CSN3001100	CSN3001200
3 1/2	2 3/4	CSN350550	CSN350600	CSN350700	CSN350800	CSN350900	CSN3501000	CSN3501100	CSN3501200
4	2 7/8	CSN400550	CSN400600	CSN400700	CSN400800	CSN400900	CSN4001000	CSN4001100	CSN4001200
6	3	-	CSN600600	CSN600700	CSN600800	CSN600900	CSN6001000	CSN6001100	CSN6001200
8	3 1/2	-	-	-	CSN800800	CSN800900	CSN8001000	CSN8001100	CSN8001200

Pipe Fittings

Carbon Steel Sch 80

Elbow 90

Size	Part #
1/4	FS90EL025
3/8	FS90EL038
1/2	FS90EL050
3/4	FS90EL075
1	FS90EL100
1 1/4	FS90EL125
1 1/2	FS90EL150
2	FS90EL200
2 1/2	FS90EL250
3	FS90EL300
4	FS90EL400
6	FS90EL600
8	FS90EL800

Elbow 45

Size	Part #
1/4	FS45EL025
3/8	FS45EL038
1/2	FS45EL050
3/4	FS45EL075
1	FS45EL100
1 1/4	FS45EL125
1 1/2	FS45EL150
2	FS45EL200
2 1/2	FS45EL250
3	FS45EL300
4	FS45EL400
6	FS45EL600
8	FS45EL800

Tee

Size	Part #
1/4	FSTEE025
3/8	FSTEE038
1/2	FSTEE050
3/4	FSTEE075
1	FSTEE100
1 1/4	FSTEE125
1 1/2	FSTEE150
2	FSTEE200
2 1/2	FSTEE250
3	FSTEE300
4	FSTEE400
6	FSTEE600
8	FSTEE800

Street Elbow 90

Size	Part #
1/4	FS90SE025
3/8	FS90SE038
1/2	FS90SE050
3/4	FS90SE075
1	FS90SE100
1 1/4	FS90SE125
1 1/2	FS90SE150
2	FS90SE200
2 1/2	FS90SE250
3	FS90SE300
4	FS90SE400
6	FS90SE600
8	FS90SE800

Street Elbow 45

Size	Part #
1/4	FS45SE025
3/8	FS45SE038
1/2	FS45SE050
3/4	FS45SE075
1	FS45SE100
1 1/4	FS45SE125
1 1/2	FS45SE150
2	FS45SE200
2 1/2	FS45SE250
3	FS45SE300
4	FS45SE400
6	FS45SE600
8	FS45SE800

Square Plug

Size	Part #
1/4	FSPL025
3/8	FSPL038
1/2	FSPL050
3/4	FSPL075
1	FSPL100
1 1/4	FSPL125
1 1/2	FSPL150
2	FSPL200
2 1/2	FSPL250
3	FSPL300
4	FSPL400
6	FSPL600
8	FSPL800

Round Cap

Size	Part #
1/4	FSCAP025
3/8	FSCAP038
1/2	FSCAP050
3/4	FSCAP075
1	FSCAP100
1 1/4	FSCAP125
1 1/2	FSCAP150
2	FSCAP200
2 1/2	FSCAP250
3	FSCAP300
4	FSCAP400
6	FSCAP600
8	FSCAP800

Union

Size	Part #
1/4	FSU025
3/8	FSU038
1/2	FSU050
3/4	FSU075
1	FSU100
1 1/4	FSU125
1 1/2	FSU150
2	FSU200
2 1/2	FSU250
3	FSU300
4	FSU400
6	FSU600
8	FSU800

Coupling

Size	Part #
1/4	FSCP025
3/8	FSCP038
1/2	FSCP050
3/4	FSCP075
1	FSCP100
1 1/4	FSCP125
1 1/2	FSCP150
2	FSCP200
2 1/2	FSCP250
3	FSCP300
4	FSCP400
6	FSCP600
8	FSCP800

Half Coupling

Size	Part #
1/4	WSHC025S80
3/8	WSHC038S80
1/2	WSHC050S80
3/4	WSHC075S80
1	WSHC100S80
1 1/4	WSHC125S80
1 1/2	WSHC150S80
2	WSHC200S80
2 1/2	WSHC250S80
3	WSHC300S80
4	WSHC400S80
6	WSHC600S80
8	WSHC800S80

Pipe Fittings

Carbon Steel Nipples Sch 80

Close Nipple

Nipple

Pipe Size	Close Length	Close	1 1/2″	2″	2 1/2″	3″	4″	4 1/2″	5″
1/8	3/4	CSN013CLS80	CSN013150S80	CSN013200S80	CSN013250S80	CSN013300S80	CSN013400S80	CSN013450S80	CSN013500S80
1/4	7/8	CSN025CLS80	CSN025150S80	CSN025200S80	CSN025250S80	CSN025300S80	CSN025400S80	CSN025450S80	CSN025500S80
3/8	1	CSN038CLS80	CSN100150S80	CSN038200S80	CSN038250S80	CSN038300S80	CSN038400S80	CSN038450S80	CSN038500S80
1/2	1 1/8	CSN050CLS80	CSN050150S80	CSN050200S80	CSN050250S80	CSN050300S80	CSN050400S80	CSN050450S80	CSN050500S80
3/4	1 3/8	CSN075CLS80	CSN075150S80	CSN075200S80	CSN075250S80	CSN075300S80	CSN075400S80	CSN075450S80	CSN075500S80
1	1 1/2	CSN100CLS80	CSN100150S80	CSN100200S80	CSN100250S80	CSN100300S80	CSN100400S80	CSN100450S80	CSN100500S80
1 1/4	1 5/8	CSN125CLS80	CSN125150S80	CSN125200S80	CSN125250S80	CSN125300S80	CSN125400S80	CSN125450S80	CSN125500S80
1 1/2	1 3/4	CSN150CLS80	CSN150150S80	CSN150200S80	CSN150250S80	CSN150300S80	CSN150400S80	CSN150450S80	CSN150500S80
2	2	CSN200CLS80	-	CSN200200S80	CSN200250S80	CSN200300S80	CSN200400S80	CSN200450S80	CSN200500S80
2 1/2	2 1/2	CSN250CLS80	-	-	CSN250250S80	CSN250300S80	CSN250400S80	CSN250450S80	CSN250500S80
3	2 5/8	CSN300CLS80	-	-	-	CSN300300S80	CSN300400S80	CSN300450S80	CSN300500S80
3 1/2	2 3/4	CSN350CLS80	-	-	-	-	CSN350400S80	CSN350450S80	CSN350500S80
4	2 7/8	CSN400CLS80	-	-	-	-	CSN400400S80	CSN400450S80	CSN400500S80
6	3	CSN600CLS80	-	-	-	-	-	-	-
8	3 1/2	CSN800CLS80	-	-	-	-	-	-	-

Pipe Size	Close Length	5 1/2″	6″	7″	8″	9″	10″	11″	12″
1/8	3/4	CSN013550S80	CSN013600S80	CSN013700S80	CSN013800S80	CSN013900S80	CSN0131000S80	CSN0131100S80	CSN0131200S80
1/4	7/8	CSN025550S80	CSN025600S80	CSN025700S80	CSN025800S80	CSN025900S80	CSN0251000S80	CSN0251100S80	CSN0251200S80
3/8	1	CSN038550S80	CSN038600S80	CSN038700S80	CSN038800S80	CSN038900S80	CSN0381000S80	CSN0381100S80	CSN0381200S80
1/2	1 1/8	CSN050550S80	CSN050600S80	CSN050700S80	CSN050800S80	CSN050900S80	CSN0501000S80	CSN0501100S80	CSN0501200S80
3/4	1 3/8	CSN075550S80	CSN075600S80	CSN075700S80	CSN075800S80	CSN075900S80	CSN0751000S80	CSN0751100S80	CSN0751200S80
1	1 1/2	CSN100550S80	CSN100600S80	CSN100700S80	CSN100800S80	CSN100900S80	CSN1001000S80	CSN1001100S80	CSN1001200S80
1 1/4	1 5/8	CSN125550S80	CSN125600S80	CSN125700S80	CSN125800S80	CSN125900S80	CSN1251000S80	CSN1251100S80	CSN1251200S80
1 1/2	1 3/4	CSN150550S80	CSN150600S80	CSN150700S80	CSN150800S80	CSN150900S80	CSN1501000S80	CSN1501100S80	CSN1501200S80
2	2	CSN200550S80	CSN200600S80	CSN200700S80	CSN200800S80	CSN200900S80	CSN2001000S80	CSN2001100S80	CSN2001200S80
2 1/2	2 1/2	CSN250550S80	CSN250600S80	CSN250700S80	CSN250800S80	CSN250900S80	CSN2501000S80	CSN2501100S80	CSN2501200S80
3	2 5/8	CSN300550S80	CSN300600S80	CSN300700S80	CSN300800S80	CSN300900S80	CSN3001000S80	CSN3001100S80	CSN3001200S80
3 1/2	2 3/4	CSN350550S80	CSN350600S80	CSN350700S80	CSN350800S80	CSN350900S80	CSN3501000S80	CSN3501100S80	CSN3501200S80
4	2 7/8	CSN400550S80	CSN400600S80	CSN400700S80	CSN400800S80	CSN400900S80	CSN4001000S80	CSN4001100S80	CSN4001200S80
6	3	-	CSN600600S80	CSN600700S80	CSN600800S80	CSN600900S80	CSN6001000S80	CSN6001100S80	CSN6001200S80
8	3 1/2	-	-	-	CSN800800S80	CSN800900S80	CSN8001000S80	CSN8001100S80	CSN8001200S80

Pipe Fittings

316 Stainless Steel Sch 40

Elbow 90

Size	Part #
1/4	SS90EL025
3/8	SS90EL038
1/2	SS90EL050
3/4	SS90EL075
1	SS90EL100
1 1/4	SS90EL125
1 1/2	SS90EL150
2	SS90EL200
2 1/2	SS90EL250
3	SS90EL300
4	SS90EL400
6	SS90EL600
8	SS90EL800

Elbow 45

Size	Part #
1/4	SS45EL025
3/8	SS45EL038
1/2	SS45EL050
3/4	SS45EL075
1	SS45EL100
1 1/4	SS45EL125
1 1/2	SS45EL150
2	SS45EL200
2 1/2	SS45EL250
3	SS45EL300
4	SS45EL400
6	SS45EL600
8	SS45EL800

Tee

Size	Part #
1/4	SSTEE025
3/8	SSTEE038
1/2	SSTEE050
3/4	SSTEE075
1	SSTEE100
1 1/4	SSTEE125
1 1/2	SSTEE150
2	SSTEE200
2 1/2	SSTEE250
3	SSTEE300
4	SSTEE400
6	SSTEE600
8	SSTEE800

Street Elbow 90

Size	Part #
1/4	SS90SE025
3/8	SS90SE038
1/2	SS90SE050
3/4	SS90SE075
1	SS90SE100
1 1/4	SS90SE125
1 1/2	SS90SE150
2	SS90SE200
2 1/2	SS90SE250
3	SS90SE300
4	SS90SE400
6	SS90SE600
8	SS90SE800

Street Elbow 45

Size	Part #
1/4	SS45SE025
3/8	SS45SE038
1/2	SS45SE050
3/4	SS45SE075
1	SS45SE100
1 1/4	SS45SE125
1 1/2	SS45SE150
2	SS45SE200
2 1/2	SS45SE250
3	SS45SE300
4	SS45SE400
6	SS45SE600
8	SS45SE800

Square Plug

Size	Part #
1/4	SSPL025
3/8	SSPL038
1/2	SSPL050
3/4	SSPL075
1	SSPL100
1 1/4	SSPL125
1 1/2	SSPL150
2	SSPL200
2 1/2	SSPL250
3	SSPL300
4	SSPL400
6	SSPL600
8	SSPL800

Round Cap

Size	Part #
1/4	SSCAP025
3/8	SSCAP038
1/2	SSCAP050
3/4	SSCAP075
1	SSCAP100
1 1/4	SSCAP125
1 1/2	SSCAP150
2	SSCAP200
2 1/2	SSCAP250
3	SSCAP300
4	SSCAP400
6	SSCAP600
8	SSCAP800

Union

Size	Part #
1/4	SSU025
3/8	SSU038
1/2	SSU050
3/4	SSU075
1	SSU100
1 1/4	SSU125
1 1/2	SSU150
2	SSU200
2 1/2	SSU250
3	SSU300
4	SSU400
6	SSU600
8	SSU800

Coupling

Size	Part #
1/4	SSCP025
3/8	SSCP038
1/2	SSCP050
3/4	SSCP075
1	SSCP100
1 1/4	SSCP125
1 1/2	SSCP150
2	SSCP200
2 1/2	SSCP250
3	SSCP300
4	SSCP400
6	SSCP600
8	SSCP800

Half Coupling

Size	Part #
1/4	SSHC025
3/8	SSHC038
1/2	SSHC050
3/4	SSHC075
1	SSHC100
1 1/4	SSHC125
1 1/2	SSHC150
2	SSHC200
2 1/2	SSHC250
3	SSHC300
4	SSHC400
6	SSHC600
8	SSHC800

Pipe Fittings

316 Stainless Steel Nipples Sch 40

Close Nipple

Nipple

Pipe Size	Close Length	Close	1 1/2″	2″	2 1/2″	3″	4″	4 1/2″	5″
1/8	3/4	SSN013CL	SSN013150	SSN013200	SSN013250	SSN013300	SSN013400	SSN013450	SSN013500
1/4	7/8	SSN025CL	SSN025150	SSN025200	SSN025250	SSN025300	SSN025400	SSN025450	SSN025500
3/8	1	SSN038CL	SSN100150	SSN038200	SSN038250	SSN038300	SSN038400	SSN038450	SSN038500
1/2	1 1/8	SSN050CL	SSN050150	SSN050200	SSN050250	SSN050300	SSN050400	SSN050450	SSN050500
3/4	1 3/8	SSN075CL	SSN075150	SSN075200	SSN075250	SSN075300	SSN075400	SSN075450	SSN075500
1	1 1/2	SSN100CL	SSN100150	SSN100200	SSN100250	SSN100300	SSN100400	SSN100450	SSN100500
1 1/4	1 5/8	SSN125CL	SSN125150	SSN125200	SSN125250	SSN125300	SSN125400	SSN125450	SSN125500
1 1/2	1 3/4	SSN150CL	SSN150150	SSN150200	SSN150250	SSN150300	SSN150400	SSN150450	SSN150500
2	2	SSN200CL	-	SSN200200	SSN200250	SSN200300	SSN200400	SSN200450	SSN200500
2 1/2	2 1/2	SSN250CL	-	-	SSN250250	SSN250300	SSN250400	SSN250450	SSN250500
3	2 5/8	SSN300CL	-	-	-	SSN300300	SSN300400	SSN300450	SSN300500
3 1/2	2 3/4	SSN350CL	-	-	-	-	SSN350400	SSN350450	SSN350500
4	2 7/8	SSN400CL	-	-	-	-	SSN40040	SSN400450	SSN400500
6	3	SSN600CL	-	-	-	-	-	-	-
8	3 1/2	SSN800CL	-	-	-	-	-	-	-

Pipe Size	Close Length	5 1/2″	6″	7″	8″	9″	10″	11″	12″
1/8	3/4	SSN013550	SSN013600	SSN013700	SSN013800	SSN013900	SSN0131000	SSN0131100	SSN0131200
1/4	7/8	SSN025550	SSN025600	SSN025700	SSN025800	SSN025900	SSN0251000	SSN0251100	SN0251200
3/8	1	SSN038550	SSN038600	SSN038700	SSN038800	SSN038900	SSN0381000	SSN0381100	SN0381200
1/2	1 1/8	SSN050550	SSN050600	SSN050700	SSN050800	SSN050900	SSN0501000	SSN0501100	SN0501200
3/4	1 3/8	SSN075550	SSN075600	SSN075700	SSN075800	SSN075900	SSN0751000	SSN0751100S	SN0751200
1	1 1/2	SSN100550	SSN100600	SSN100700	SSN100800	SSN100900	SSN1001000	SSN1001100S	SN1001200
1 1/4	1 5/8	SSN125550	SSN125600	SSN125700	SSN125800	SSN125900	SSN1251000	SSN1251100	SSN1251200
1 1/2	1 3/4	SSN150550	SSN150600	SSN150700	SSN150800	SSN150900	SSN1501000	SSN1501100	SSN1501200
2	2	SSN200550	SSN200600	SSN200700	SSN200800	SSN200900	SSN2001000	SSN2001100S	SN2001200
2 1/2	2 1/2	SSN250550	SSN250600	SSN250700	SSN250800	SSN250900	SSN2501000	SSN2501100S	SN2501200
3	2 5/8	SSN300550	SSN300600	SSN300700	SSN300800	SSN300900	SSN3001000	SSN3001100S	SN3001200
3 1/2	2 3/4	SSN350550	SSN350600	SSN350700	SSN350800	SSN350900	SSN3501000	SSN3501100S	SN3501200
4	2 7/8	SSN400550	SSN400600	SSN400700	SSN400800	SSN400900	SSN4001000	SSN4001100	SN4001200
6	3	-	SSN600600	SSN600700	SSN600800	SSN600900	SSN6001000	SSN6001100S	SN6001200
8	3 1/2	-	-	-	SSN800800	SSN800900	SSN8001000	SSN8001100S	SN8001200

Pipe Fittings

Polypropylene

Elbow 90

Size	Part #
1/4	PP90EL025
3/8	PP90EL038
1/2	PP90EL050
3/4	PP90EL075
1	PP90EL100
1 1/4	PP90EL125
1 1/2	PP90EL150
2	PP90EL200
2 1/2	PP90EL250
3	PP90EL300
4	PP90EL400
6	PP90EL600
8	PP90EL800

Elbow 45

Size	Part #
1/4	PP45EL025
3/8	PP45EL038
1/2	PP45EL050
3/4	PP45EL075
1	PP45EL100
1 1/4	PP45EL125
1 1/2	PP45EL150
2	PP45EL200
2 1/2	PP45EL250
3	PP45EL300
4	PP45EL400
6	PP45EL600
8	PP45EL800

Tee

Size	Part #
1/4	PPTEE025
3/8	PPTEE038
1/2	PPTEE050
3/4	PPTEE075
1	PPTEE100
1 1/4	PPTEE125
1 1/2	PPTEE150
2	PPTEE200
2 1/2	PPTEE250
3	PPTEE300
4	PPTEE400
6	PPTEE600
8	PPTEE800

Street Elbow

Size	Part #
1/4	PP90SE025
3/8	PP90SE038
1/2	PP90SE050
3/4	PP90SE075
1	PP90SE100
1 1/4	PP90SE125
1 1/2	PP90SE150
2	PP90SE200
2 1/2	PP90SE250
3	PP90SE300
4	PP90SE400
6	PP90SE600
8	PP90SE800

Street Elbow 45

Size	Part #
1/4	PP45SE025
3/8	PP45SE038
1/2	PP45SE050
3/4	PP45SE075
1	PP45SE100
1 1/4	PP45SE125
1 1/2	PP45SE150
2	PP45SE200
2 1/2	PP45SE250
3	PP45SE300
4	PP45SE400
6	PP45SE600
8	PP45SE800

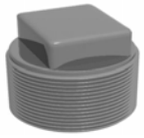

Square Plug

Size	Part #
1/4	PPPL025
3/8	PPPL038
1/2	PPPL050
3/4	PPPL075
1	PPPL100
1 1/4	PPPL125
1 1/2	PPPL150
2	PPPL200
2 1/2	PPPL250
3	PPPL300
4	PPPL400
6	PPPL600
8	PPPL800

Round Cap

Size	Part #
1/4	PPCAP025
3/8	PPCAP038
1/2	PPCAP050
3/4	PPCAP075
1	PPCAP100
1 1/4	PPCAP125
1 1/2	PPCAP150
2	PPCAP200
2 1/2	PPCAP250
3	PPCAP300
4	PPCAP400
6	PPCAP600
8	PPCAP800

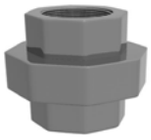

Union

Size	Part #
1/4	PPU025
3/8	PPU038
1/2	PPU050
3/4	PPU075
1	PPU100
1 1/4	PPU125
1 1/2	PPU150
2	PPU200
2 1/2	PPU250
3	PPU300
4	PPU400
6	PPU600
8	PPU800

Coupling

Size	Part #
1/4	PPCP025
3/8	PPCP038
1/2	PPCP050
3/4	PPCP075
1	PPCP100
1 1/4	PPCP125
1 1/2	PPCP150
2	PPCP200
2 1/2	PPCP250
3	PPCP300
4	PPCP400
6	PPCP600
8	PPCP800

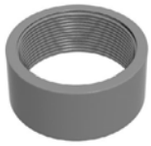

Half Coupling

Size	Part #
1/4	PPHC025
3/8	PPHC038
1/2	PPHC050
3/4	PPHC075
1	PPHC100
1 1/4	PPHC125
1 1/2	PPHC150
2	PPHC200
2 1/2	PPHC250
3	PPHC300
4	PPHC400
6	PPHC600
8	PPHC800

Pipe Fittings

Polypropylene Nipples

Close Nipple

Nipple

Pipe Size	Close Length	Close	1 1/2″	2″	2 1/2″	3″	4″	4 1/2″	5″
1/8	3/4	PPN013CL	PPN013150	PPN013200	PPN013250	PPN013300	PPN013400	PPN013450	PPN013500
1/4	7/8	PPN025CL	PPN025150	PPN025200	PPN025250	PPN025300	PPN025400	PPN025450	PPN025500
3/8	1	PPN038CL	PPN100150	PPN038200	PPN038250	PPN038300	PPN038400	PPN038450	PPN038500
1/2	1 1/8	PPN050CL	PPN050150	PPN050200	PPN050250	PPN050300	PPN050400	PPN050450	PPN050500
3/4	1 3/8	PPN075CL	PPN075150	PPN075200	PPN075250	PPN075300	PPN075400	PPN075450	PPN075500
1	1 1/2	PPN100CL	PPN100150	PPN100200	PPN100250	PPN100300	PPN100400	PPN100450	PPN100500
1 1/4	1 5/8	PPN125CL	PPN125150	PPN125200	PPN125250	PPN125300	PPN125400	PPN125450	PPN125500
1 1/2	1 3/4	PPN150CL	PPN150150	PPN150200	PPN150250	PPN150300	PPN150400	PPN150450	PPN150500
2	2	PPN200CL	-	PPN200200	PPN200250	PPN200300	PPN200400	PPN200450	PPN200500
2 1/2	2 1/2	PPN250CL	-	-	PPN250250	PPN250300	PPN250400	PPN250450	PPN250500
3	2 5/8	PPN300CL	-	-	-	PPN300300	PPN300400	PPN300450	PPN300500
3 1/2	2 3/4	PPN350CL	-	-	-	-	PPN350400	PPN350450	PPN350500
4	2 7/8	PPN400CL	-	-	-	-	PPN40040	PPN400450	PPN400500
6	3	PPN600CL	-	-	-	-	-	-	-
8	3 1/2	PPN800CL	-	-	-	-	-	-	-

Pipe Size	Close Length	5 1/2″	6″	7″	8″	9″	10″	11″	12″
1/8	3/4	PPN013550	PPN013600	PPN013700	PPN013800	PPN013900	PPN0131000	PPN0131100	PPN0131200
1/4	7/8	PPN025550	PPN025600	PPN025700	PPN025800	PPN025900	PPN0251000	PPN0251100	PPN0251200
3/8	1	PPN038550	PPN038600	PPN038700	PPN038800	PPN038900	PPN0381000	PPN0381100	PPN0381200
1/2	1 1/8	PPN050550	PPN050600	PPN050700	PPN050800	PPN050900	PPN0501000	PPN0501100	PPN0501200
3/4	1 3/8	PPN075550	PPN075600	PPN075700	PPN075800	PPN075900	PPN0751000	PPN0751100	PPN0751200
1	1 1/2	PPN100550	PPN100600	PPN100700	PPN100800	PPN100900	PPN1001000	PPN1001100	PPN1001200
1 1/4	1 5/8	PPN125550	PPN125600	PPN125700	PPN125800	PPN125900	PPN1251000	PPN1251100	PPN1251200
1 1/2	1 3/4	PPN150550	PPN150600	PPN150700	PPN150800	PPN150900	PPN1501000	PPN1501100	PPN1501200
2	2	PPN200550	PPN200600	PPN200700	PPN200800	PPN200900	PPN2001000	PPN2001100	PPN2001200
2 1/2	2 1/2	PPN250550	PPN250600	PPN250700	PPN250800	PPN250900	PPN2501000	PPN2501100	PPN2501200
3	2 5/8	PPN300550	PPN300600	PPN300700	PPN300800	PPN300900	PPN3001000	PPN3001100	PPN3001200
3 1/2	2 3/4	PPN350550	PPN350600	PPN350700	PPN350800	PPN350900	PPN3501000	PPN3501100	PPN3501200
4	2 7/8	PPN400550	PPN400600	PPN400700	PPN400800	PPN400900	PPN4001000	PPN4001100	PPN4001200
6	3	-	PPN600600	PPN600700	PPN600800	PPN600900	PPN6001000	PPN6001100	PPN6001200
8	3 1/2	-	-	-	PPN800800	PPN800900	PPN8001000	PPN8001100	PPN8001200

Pipe Fittings

Aluminum Nipples

Close Nipple

Nipple

Pipe Size	Close Length	Close	1 1/2″	2″	2 1/2″	3″	4″	4 1/2″	5″
1/8	3/4	ALN013CL	ALN013150	ALN013200	ALN013250	ALN013300	ALN013400	ALN013450	ALN013500
1/4	7/8	ALN025CL	ALN025150	ALN025200	ALN025250	ALN025300	ALN025400	ALN025450	ALN025500
3/8	1	ALN038CL	ALN100150	ALN038200	ALN038250	ALN038300	ALN038400	ALN038450	ALN038500
1/2	1 1/8	ALN050CL	ALN050150	ALN050200	ALN050250	ALN050300	ALN050400	ALN050450	ALN050500
3/4	1 3/8	ALN075CL	ALN075150	ALN075200	ALN075250	ALN075300	ALN075400	ALN075450	ALN075500
1	1 1/2	ALN100CL	ALN100150	ALN100200	ALN100250	ALN100300	ALN100400	ALN100450	ALN100500
1 1/4	1 5/8	ALN125CL	ALN125150	ALN125200	ALN125250	ALN125300	ALN125400	ALN125450	ALN125500
1 1/2	1 3/4	ALN150CL	ALN150150	ALN150200	ALN150250	ALN150300	ALN150400	ALN150450	ALN150500
2	2	ALN200CL	-	ALN200200	ALN200250	ALN200300	ALN200400	ALN200450	ALN200500
2 1/2	2 1/2	ALN250CL	-	-	ALN250250	ALN250300	ALN250400	ALN250450	ALN250500
3	2 5/8	ALN300CL	-	-	-	ALN300300	ALN300400	ALN300450	ALN300500
3 1/2	2 3/4	ALN350CL	-	-	-	-	ALN350400	ALN350450	ALN350500
4	2 7/8	ALN400CL	-	-	-	-	ALN40040	ALN400450	ALN400500
6	3	ALN600CL	-	-	-	-	-	-	-
8	3 1/2	ALN800CL	-	-	-	-	-	-	-

Pipe Size	Close Length	5 1/2″	6″	7″	8″	9″	10″	11″	12″
1/8	3/4	ALN013550	ALN013600	ALN013700	ALN013800	ALN013900	ALN0131000	ALN0131100	ALN0131200
1/4	7/8	ALN025550	ALN025600	ALN025700	ALN025800	ALN025900	ALN0251000	ALN0251100	ALN0251200
3/8	1	ALN038550	ALN038600	ALN038700	ALN038800	ALN038900	ALN0381000	ALN0381100	ALN0381200
1/2	1 1/8	ALN050550	ALN050600	ALN050700	ALN050800	ALN050900	ALN0501000	ALN0501100	ALN0501200
3/4	1 3/8	ALN075550	ALN075600	ALN075700	ALN075800	ALN075900	ALN0751000	ALN0751100	ALN0751200
1	1 1/2	ALN100550	ALN100600	ALN100700	ALN100800	ALN100900	ALN1001000	ALN1001100	ALN1001200
1 1/4	1 5/8	ALN125550	ALN125600	ALN125700	ALN125800	ALN125900	ALN1251000	ALN1251100	ALN1251200
1 1/2	1 3/4	ALN150550	ALN150600	ALN150700	ALN150800	ALN150900	ALN1501000	ALN1501100	ALN1501200
2	2	ALN200550	ALN200600	ALN200700	ALN200800	ALN200900	ALN2001000	ALN2001100	ALN2001200
2 1/2	2 1/2	ALN250550	ALN250600	ALN250700	ALN250800	ALN250900	ALN2501000	ALN2501100	ALN2501200
3	2 5/8	ALN300550	ALN300600	ALN300700	ALN300800	ALN300900	ALN3001000	ALN3001100	ALN3001200
3 1/2	2 3/4	ALN350550	ALN350600	ALN350700	ALN350800	ALN350900	ALN3501000	ALN3501100	ALN3501200
4	2 7/8	ALN400550	ALN400600	ALN400700	ALN400800	ALN400900	ALN4001000	ALN4001100	ALN4001200
6	3	-	ALN600600	ALN600700	ALN600800	ALN600900	ALN6001000	ALN6001100	ALN6001200
8	3 1/2	-	-	-	ALN800800	ALN800900	ALN8001000	ALN8001100	ALN8001200

Pipe Fittings

Carbon Steel - Victaulic

Pipe Size	4″	6″	8″
2	CSNV200400	CSNV200600	CSNV200800
3	CSNV300400	CSNV300600	CSNV300800
4	CSNV400400	CSNV400600	CSNV400800
6	-	CSNV600600	CSNV600800
8	-	-	CSNV800800

Aluminum - Victaulic

Pipe Size	4″	6″	8″
1	ALNV100400	ALNV100600	ALNV100800
2	ALNV200400	ALNV200600	ALNV200800
2 1/2	ALNV250400	ALNV250600	ALNV250800
3	ALNV300400	ALNV300600	ALNV300800
4	ALNV400400	ALNV400600	ALNV400800
6	-	ALNV600600	ALNV600800
8	-	-	ALNV800800

Pipe Fittings

PVC Sch 80

Elbow 90

Size	Part #
1/4	806002
3/8	806003
1/2	806005
3/4	806007
1	806010
1 1/4	806012
1 1/2	806015
2	806020
2 1/2	806025
3	806030
4	806040
6	806060
8	806080

Elbow 45

Size	Part #
1/4	817002
3/8	817003
1/2	817005
3/4	817007
1	817010
1 1/4	817012
1 1/2	817015
2	817020
2 1/2	817025
3	817030
4	817040
6	817060
8	817080

Tee

Size	Part #
1/4	-
3/8	-
1/2	801005
3/4	801007
1	801010
1 1/4	801012
1 1/2	801015
2	801020
2 1/2	801025
3	801030
4	801040
6	801060
8	801080

Street Elbow 45

Size	Part #
1/4	-
3/8	-
1/2	827005
3/4	827007
1	827010
1 1/4	827012
1 1/2	827015
2	827020
2 1/2	827025
3	827030
4	827040
6	827060
8	827080

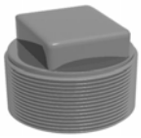

Square Plug

Size	Part #
1/4	850002
3/8	850003
1/2	850005
3/4	850007
1	850010
1 1/4	850012
1 1/2	850015
2	850020
2 1/2	850025
3	850030
4	850040
6	850060
8	850080

Round Cap

Size	Part #
1/4	848002
3/8	848003
1/2	848005
3/4	848007
1	848010
1 1/4	848012
1 1/2	848015
2	848020
2 1/2	848025
3	848030
4	848040
6	848060
8	848080

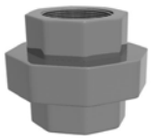

Union

Size	Part #
1/4	858002
3/8	858003
1/2	858005
3/4	858007
1	858010
1 1/4	858012
1 1/2	858015
2	858020
2 1/2	858025
3	858030
4	858040
6	858060
8	858080

Coupling

Size	Part #
1/4	830002
3/8	830003
1/2	830005
3/4	830007
1	830010
1 1/4	830012
1 1/2	830015
2	830020
2 1/2	830025
3	830030
4	830040
6	830060
8	830080

Pipe Fittings

PVC Nipples Sch 80

Close Nipple

Nipple

Pipe Size	Close Length	Close	1 1/2″	2″	2 1/2″	3″	4″	4 1/2″	5″
1/8	3/4	-	-	-	-	-	-	-	-
1/4	7/8	-	-	-	-	-	-	-	-
3/8	1								
1/2	1 1/8	882005	882015	882020	882025	882030	882040	882045	882050
3/4	1 3/8	883005	883015	883020	883025	883030	883040	883045	883050
1	1 1/2	884005	884015	884020	884025	884030	884040	884045	884050
1 1/4	1 5/8	885005	885015	885020	885025	885030	885040	885045	885050
1 1/2	1 3/4	886005	886015	886020	886025	886030	886040	886045	886050
2	2	887005	887015	887020	887025	887030	887040	887045	887050
2 1/2	2 1/2	-	-	-	-	-	-	-	-
3	2 5/8	-	-	-	-	-	-	-	-
3 1/2	2 3/4	-	-	-	-	-	-	-	-
4	2 7/8	-	-	-	-	-	-	-	-
6	3	-	-	-	-	-	-	-	-
8	3 1/2	-	-	-	-	-	-	-	-

Pipe Size	Close Length	5 1/2″	6″	7″	8″	9″	10″	11″	12″
1/8	3/4	-	-	-	-	-	-	-	-
1/4	7/8	-	-	-	-	-	-	-	-
3/8	1	-	-	-	-	-	-	-	-
1/2	1 1/8	882055	882060	882070	882080	882090	882100	882110	882120
3/4	1 3/8	883055	883060	883070	883080	883090	883100	883110	883120
1	1 1/2	884055	884060	884070	884080	884090	884100	884110	884120
1 1/4	1 5/8	885055	885060	885070	885080	885090	885100	885110	885120
1 1/2	1 3/4	886055	886060	886070	886080	886090	886100	886110	886120
2	2	887055	887060	887070	887080	887090	887100	887110	887120
2 1/2	2 1/2	-	-	-	-	-	-	-	-
3	2 5/8	-	-	-	-	-	-	-	-
3 1/2	2 3/4	-	-	-	-	-	-	-	-
4	2 7/8	-	-	-	-	-	-	-	-
6	3	-	-	-	-	-	-	-	-
8	3 1/2	-	-	-	-	-	-	-	-

DRY DISCONNECT

PRODUCT	FLOW	DRIPPAGE	PRICE	PRESSURE	ERGONOMIC
Kamvalok®	Good	Good	$	150	Good
	A unique poppet action virtually eliminates any spillage of residual liquid during disconnection, making Kamvalok® the ideal choice for use in applications where any amount of product loss is unacceptable.				
Kamvalok® Flat	Good	Better	$	150	Good
	Combines proven, best-in-class Kamvalok® poppet technology with flattened connection points to create a dry disconnect that removes all cavities where liquid can pool and subsequently spill upon disconnection.				
Drylok®	Good	Better/Best	$$	150	Good
	An interlocking handle eliminates accidental spills by preventing uncoupling while the valve is open, while the unit's flat face minimizes fluid loss, further reducing exposure to spillage risks during operation.				
Twist-Lok™ Couplings	Good	Better/Best	$$	360	Best
	The design of the Twist-Lok™ delivers user-friendly operation and simple handling while providing a quick, easy and fully interlocked connection for increased safety with minimal product loss.				
Epsilon™	Best	Best	$$$$	360	Good
	The Epsilon™ features a ball-valve design with double shutoff capability that prevents spills, reduces fugitive emissions and improves safety, while an unrestricted flow path optimizes loading and unloading times.				

QUICK DISCONNECT

PRODUCT	FLOW	DRIPPAGE	PRICE	PRESSURE	ERGONOMIC
Kamlok®	–	–	$	Up to 250	Good
	The world's most popular cam-and-groove quick disconnect, the Kamlok® features the exclusive Twin Kam™ arm design that prevents accidental product releases and Spring-Ring™ that ensures ease of operation.				
Autolok®	–	–	$$	Up to 250	Best
	The self-locking design provides safety and convenience at the fluid connection with built-in coupling arms allowing quick and secure locking with no need for ancillary pins, buttons or clips.				
HT3-TL Coupler	–	–	$$	Up to 3245	Best
	An all-purpose quick coupling designed with a metal-to-metal wedge seal that requires no hammering for a secure seal to be realized and a no-variance pipe diameter that offers non-restricted flow.				
Locking Quick Coupler (LQC)	–	–	$$$	Up to 655	Best
	The Twister® achieves quick, secure connection and spillage-free disconnection with just a quarter turn of the Locking Quick Connect (LQC) with no need for any special tools or equipment.				

HT3-TL COUPLER

Transfer-Loading Safety Quick Coupling

Metal-to-metal wedge seal provides a secure connection

HT3-TL Transfer-Loading Coupler

The HT3-TL Transfer-Loading Series is an all-purpose high-performance quick coupler designed for leak-proof sealing through a wide range of temperatures. The design offers a non-restrictive flow with no variation in pipe diameter. The reusable metal-to-metal wedge-sealing components further enhance the seal as temperature changes are encountered. The retaining ring ensures safe venting of any residual pressure.

Features & Benefits:

- **IDEAL FOR CRYOGENICS** takes on virtually any pressure at any temperature
- **DESIGNED TO REPLACE** hammer unions and conventional CAM locking couplers
- **REUSABLE** metal-to-metal wedge seal with secondary redundant O-ring seal
- **NON-RESTRICTIVE FLOW** characteristics for faster hookups
- **UNIQUE AUTOMATIC SAFETY FEATURE** vents residual pressure
- **1"- 6" SIZE**
- **ELIMINATES BRUTE FORCE CONNECTIONS** (i.e. hammers & pipe wrenches) – reduces muscular-skeletal injuries
- **APPROVED FOR CHLORINE SERVICE**

OPW ENGINEERED SYSTEMS a DOVER company

LQC
Locking Quick Connect

The Twister Locking Quick Connect (LQC) is the only coupling in the world guaranteed to not come off when pressure is in the line. Engineered for critical-service applications, the LQC excels in extreme temperatures and pressures.

Features & Benefits:

- **RAPID ENGAGEMENT,** 1/4 twist on/off
- **LOW-PRESSURE OR VACUUM LOCKING**
- **COUPLING LOCKS DURING UNCOUPLING** should residual product or line pressure be present
- **SMOOTH BORE,** ideal for pigging applications
- **COMMERCIALLY AVAILABLE O-RING SEALS**
- **OPTIONAL SNAP-IN CUSTOMIZED HANDLES** for tight spots

OPW ENGINEERED SYSTEMS
a DOVER company

opw-es.com

ENGINEERING | WHAT'S NEXT

The Reliable Solution To Prevent Spillage

Kamvalok®
Dry Disconnect Coupler

OPW Kamvalok® Dry Disconnect Couplings are considered the standard of the industry. Used at liquid-transfer points where product loss could occur, OPW Kamvaloks provide a reliable solution to prevent spillage during connection or disconnection.

Features & Benefits:

- **SST LOCKING HANDLE** Locks in position to prevent accidental opening or closing of valve.
- **AUTOLOK™ LOCKING ARMS** Provide added protection with an automatic locking mechanism signaled by a positive click. Release requires only an easy tug on the lock release.
- **PROVIDES FOR TOTAL CLOSED-LOOP LOADING CAPABILITIES** Keeps hazardous liquids and vapors inline and out of the environment. Provides automatic closure from both directions – the coupler and the adaptor – to prevent accidental spills.
- **SPILL PROTECTION** Helps reduce the hazards involved in the connection/disconnection process of transferring hazardous materials.
- **SAFE & EASY MAINTENANCE** Unique stuffing-box design makes disassembly/maintenance quick and easy.
- **1-1/2", 2" AND 3" SIZES**
- **ALUMINUM OR STAINLESS-STEEL CONSTRUCTION**
- **OPERATING PRESSURES UP TO 210 PSI (15 BAR)**
- **CAN BE COUPLED IN ANY ORIENTATION** – 360°
- **AUTOMATICALLY SHUTS OFF FLOW** if accidental disconnect occurs

OPW ENGINEERED SYSTEMS
a DOVER company

opw-es.com

ENGINEERING | WHAT'S NEXT

DRYLOK® COUPLER

Unmatched Product-Loss Prevention

Ideal for all types of hazardous fluids

Drylok®
Dry Disconnect Coupler

Drylok® is designed to safely transfer hazardous, corrosive and volatile liquids such as acids, solvents and petrochemicals. Rugged design, excellent flow with little product loss makes the Drylok ideal for the most challenging loading-rack environments. The Drylok has become the coupler of choice in many of the most critical loading applications.

Features & Benefits:

- **VERY LOW PRODUCT LOSS.** Flat Poppet Face design ensures minimal loss at disconnect.
- **FULLY INTERLOCKED.** Double Safety System. Cannot be opened unless connected to mating fitting.
- **CAN BE COUPLED IN ANY ORIENTATION** – 360°
- **OPTIMAL FLOW.** Less obstruction and greater flow area provides better flow characteristics in high-pressure or high-viscosity applications.
- **RUGGED.** Designed to withstand everyday use/abuse at the loading rack.
- **EASE OF MAINTENANCE.** Standard o-ring seals make maintenance simple, easy and cost-effective.
- **150-PSI (10-BAR) PRESSURE RATING**
- **1", 2" & 3" SIZES**
- **STAINLESS-STEEL, ALLOY 20 OR HASTELLOY C CONSTRUCTION**
- **AAR APPROVED**
- **CRN APPROVED**

OPW ENGINEERED SYSTEMS
a DOVER company

opw-es.com

ENGINEERING | WHAT'S NEXT

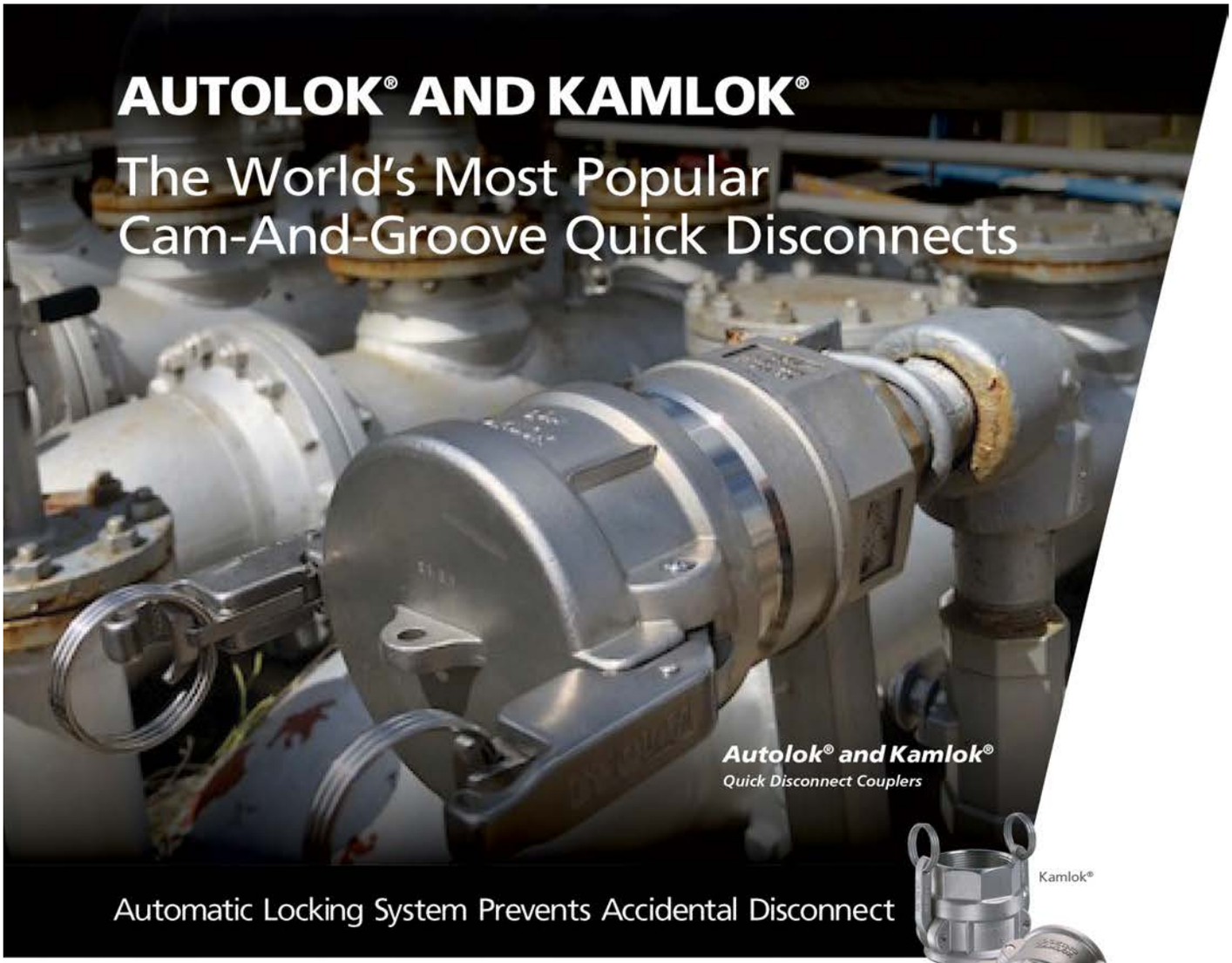

OPW's Kamlok® and Autolok® Quick Disconnects are the industry standard in cam-and-groove couplers for safety and ease of use. All Kamloks and Autoloks feature the exclusive Twin-Kam™ arm design to help prevent accidental release, and Spring-Ring™ to ensure proper position of finger rings.

Features & Benefits:

- **TWIN-KAM™** arms feature a unique detent position that helps prevent accidental release. Even with both arms partially opened, the Twin-Kam detents hold the adaptor more firmly in the coupler. All arms are **Guaranteed For Life (GFL)**.
- **SPRING-RING™** design prevents finger rings from getting trapped under the arms, ensuring proper closure.
- All **AUTOLOKS** feature an integral automatic self-locking feature. Simply snap the locking arms shut with one smooth motion.
- **CONSTRUCTED OF 316 STAINLESS STEEL**
- **¾" TO 4" SIZES**

OPW ENGINEERED SYSTEMS
a DOVER company

opw-es.com

ENGINEERING | WHAT'S NEXT

Minimize fluid loss with the quick-and-easy connection

Twist-Lok™ represents the latest addition to OPW's industry-leading range of Dry Disconnect Couplers. With its user-friendly operation and simple handling, the Twist-Lok provides a quick, easy connection with minimal product loss.

Features & Benefits:

- **FULLY INTERCHANGEABLE** with other manufacturers, such as TODO-MATIC, Mann Tek, etc. Manufactured in accordance with NATO STANAG 3756.
- **Pressure Ratings** up to 360 PSI; ideal for LPG and other higher-pressure applications.
- **316 STAINLESS-STEEL** construction
- **AVAILABLE** in 1", 2", 3" and 4" sizes. Larger sizes available upon request.
- **INTEGRAL HEAVY-DUTY SWIVEL** to aid connection and minimize hose wear.
- **DOUBLE SAFETY** Fully Interlocked plus locking mechanism in open position.
- **PRODUCT SELECTIVITY** available via mechanical keying – minimizes risk of cross contamination.
- **SUITABLE FOR VACUUM SERVICE**

OPW ENGINEERED SYSTEMS
a DOVER company

opw-es.com

ENGINEERING | WHAT'S NEXT

NEW KAMVALOK® FLAT-FACE COUPLER

Reduces up to 85% of Fluid Loss at Disconnect

Flat-Out Better Spill Prevention

The new Kamvalok® Flat is the next generation of OPW dry-disconnect couplings. We've taken our proven, best-in-class Kamvalok and flattened the connection points. This effectively eliminates all cavities where liquid can pool and subsequently spill upon disconnection.

Features & Benefits:

- **REDUCE PRODUCT LOSS** at disconnect by up to 85%
- **NEW** patent-pending smooth, flat-face poppets
- **INDUSTRY-STANDARD** locking handle
- **EASY TO CLOSE** Autolok™ locking arms with spring rings
- **AUTOMATIC LOCKING ARMS,** no pins or buttons
- **VIBRATION-RESISTANT** Twin-Kam™ arms
- **CAN BE COUPLED IN ANY ORIENTATION** – 360°
- **AUTOMATICALLY SHUTS OFF FLOW** if accidental disconnect occurs

OPW ENGINEERED SYSTEMS
a DOVER company

opw-es.com

ENGINEERING | WHAT'S NEXT

Kamvaloks Dry Break Couplings

- Civacon Kamaloks are used at liquid transfer points where you do not want product loss. They are in use at manufacturers of paint, lacquers, inks, adhesives, fatty acids, pharmaceuticals, liquid soap products, and scores of other liquid products, solvents, agricultural chemicals, vegetable oils, detergents, lacquers, and many acids and caustics.
- Available with aluminum pipe-ends and aluminum zinc adaptor noses, with plated steel internal parts; aluminum with stainless steel internal parts; and all stainless steel. Flow guide fins are Delron or stainless steel. Seals are available in Buna N, Viton, EPT, EPDM, Kalrez, Chemraz, or other compounds as available.

Part #	Product	Size (in.)	Construction	Seals
1611-AN	ADAPTER	1 1/2, 2, 3	ALUMINUM, STAINLESS STEEL**	BUNA-N
1612-AN	ADAPTER	1 1/2, 2, 3	ALUMINUM, STAINLESS STEEL**	VITON
1612-A	ADAPTER	3/4	STAINLESS STEEL**	VITON
1612-AN	ADAPTER	1 1/2, 2, 3	STAINLESS STEEL**	VITON
1613-AN	ADAPTER	1 1/2, 2, 3	STAINLESS STEEL**	TEFLON
1614-AN	ADAPTER	1 1/2, 2, 3	STAINLESS STEEL**	E.P.T.
1671-AN	ADAPTER	1 1/2, 2, 3	STAINLESS STEEL**	BUNA-N
1672-AN	ADAPTER	1 1/2, 2, 3	STAINLESS STEEL**	VITON
1673-AN	ADAPTER	1 1/2, 2, 3	STAINLESS STEEL**	TEFLON
1673-ANF	ADAPTER	1 1/2, 2, 3	STAINLESS STEEL** #150 FLANGE	TEFLON
1674-AN	ADAPTER	1 1/2, 2, 3	STAINLESS STEEL**	E.P.T.
1674-ANF	ADAPTER	1 1/2, 2, 3	STAINLESS STEEL** #150 FLANGE	E.P.T.
1676-AN	ADAPTER	1 1/2, 2, 3	STAINLESS STEEL** #150 FLANGE	CHEMRAZ
1676-ANF	ADAPTER	1 1/2, 2, 3	STAINLESS STEEL** #150 FLANGE	CHEMRAZ
1711-DL	COUPLER	1 1/2, 2, 3	ALUMINUM, ACETAL	BUNA-N
1711-ES	ELBOW SWIVEL COUPLER	2	ALUMINUM, ACETAL	BUNA-N
1712-DL	COUPLER	1 1/2, 2, 3	ALUMINUM, ACETAL	VITON
1712-DP	COUPLER	3/4	ALUMINUM, ACETAL	VITON
1712-ES	ELBOW SWIVEL COUPLER	2	ALUMINUM, ACETAL	VITON
1714-DL	COUPLER	1 1/2, 2, 3	STAINLESS STEEL**	E.P.T.
1716-DL	COUPLER	1 1/2, 2, 3	STAINLESS STEEL**	TEFLON & CHEMRAZ
1771-DL	COUPLER	1 1/2, 2, 3	STAINLESS STEEL**	BUNA-N
1772-DL	COUPLER	1 1/2, 2, 3	STAINLESS STEEL**	VITON
1774-DL	COUPLER	1 1/2, 2, 3	STAINLESS STEEL**	E.P.T
1773-DL	COUPLER	1 1/2, 2, 3	STAINLESS STEEL**	TEFLON & CHEMRAZ
1776-DL	COUPLER	1 1/2, 2, 3	STAINLESS STEEL**	CHEMRAZ
D2000™ Series				
2271-D	COUPLER	1 1/2, 2	STAINLESS STEEL**	BUNA-N
2272-D	COUPLER	1 1/2, 2	STAINLESS STEEL**	VITON
2274-D	COUPLER	1 1/2, 2	STAINLESS STEEL**	E.P.T.
2275-D	COUPLER	1 1/2, 2	STAINLESS STEEL**	TEFLON & CHEMRAZ

Epsilon Low Spill Coupling System

Applications:
- Bulk storage
- In-plant processing
- Reactor units
- Filtration units
- Tank Car
- Rail Car

- Next generation PTFE with best combination of temperature, sealing, and sliding characteristics

Temp Range:
- -22°F to +450°F

Size	Spillage	Maximum Spillage*	Flow Rate	CV	Max Working Pressure	Weight Adapter	Weight Coupler
1″	<0.7 ml	<25 PPM	50 GPM	42	435 PSIG	2.7 lbs.	3.0 lbs.
2″	<0.6 ml	<25 PPM	150 GPM	160	435 PSIG	4.0 lbs.	6.0 lbs.
3″	<2.0	<25 PPM	300 GPM	240	360 PSIG	16.0 lbs.	20.0 lbs.

The features of the EPSILON® dry disconnect coupling are extensive. Chart 1 below provides the specifics of these features.

- Flow rates from 50 GPM for the 1″ to 300 GPM for the 3″ product line. This coupling will keep up with demand, whatever your application.

- Flow coefficient (Cv) for valves. Flow rate shown in gallons per minute of 70°F water with 1.0 psi, pressure drop across the valve, 2″coupling features (Cv) of 160.

- Fugitive emissions of less than 25 ppm, is standard. In most cases, it is below the limit of analytical detection.

Valve Size

EPSILON® couplings can be attached to hose or pipe sizes ranging from 3/4″ to 3″ or DN 20 to DN 80.
There are three different valve body sizes that are machined to accept the different sizes and different connection types. Chart 2 indicates the valve body size that would be used with a given port size.

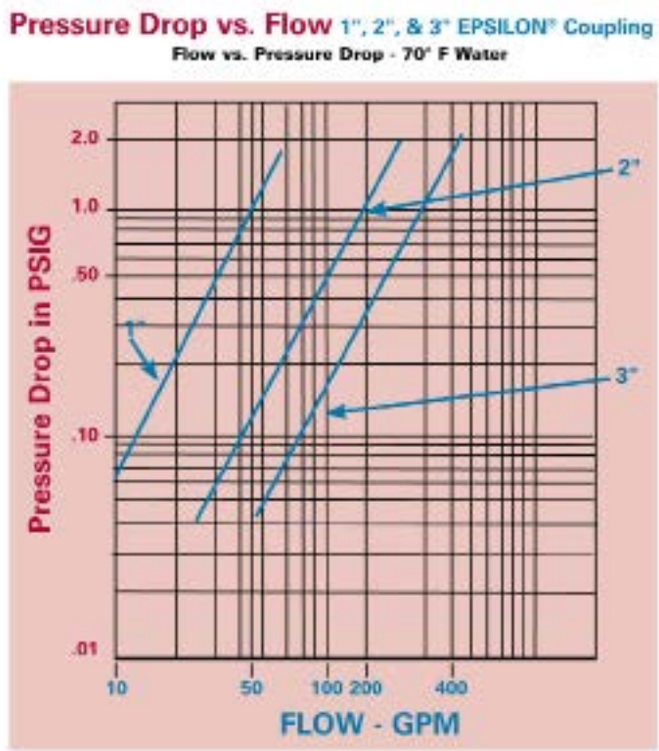

Chart 1

How to Order

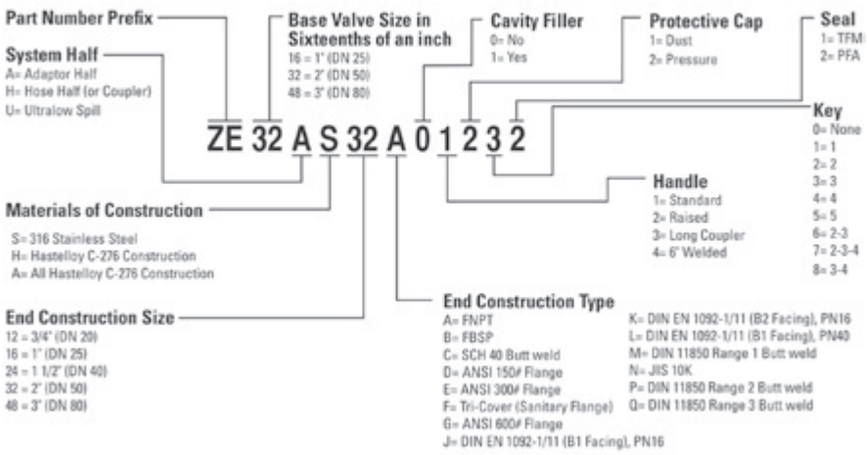

Availability of styles, sizes, and materials may vary depending on swivel configurations. Consult OPW Customer Service regarding your exact requirements.

Sanitary Fittings

Size	Part #
1	CSSR100
1 1/2	CSSR150
2	CSSR200
3	CSSR300
4	CSSR400

Sanitary Clamps

Size	Part #
1	21MP-100
1 1/2	21MP-150
2	21MP-200
3	21MP-300
4	21MP-400

Sanitary Ferrules

Size	Hose OD From:	To:	Part #
1	1-26/64	1-28/64	F16G-1453
	1-29/64	1-31/64	F16G-1500
	1-32/64	1-34/64	F16G-1547
	1-35/64	1-37/64	F16G-1594
	1-38/64	1-40/64	F16G-1641
1 1/2	1-58/64	1-61/64	F24G-1969
	1-62/64	2-1/64	F24G-2031
	2-2/64	2-5/64	F24G-2094
	2-2/64	2-9/64	F24G-2156
2	2-30/64	2-33/64	F32G-2531
	2-34/64	2-37/64	F32G-2594
	2-38/64	2-41/64	F32G-2656
	2-42/64	2-45/64	F32G-2719
	2-52/64	2-55/64	F32G-2875
3	3-39/64	3-42/64	F48G-3625
	3-40/64	3-43/64	F48G-3688
	3-44/64	3-47/64	F48G-3750
	3-48/64	3-51/64	F48G-3813
	3-52/64	3-55/64	F48G-3875
	3-56/64	3-59/64	F48G-3938
	3-61/64	4	F48G-4016
4	4-40/64	4-43/64	F64G-4688
	4-44/64	4-47/64	F64G-4750
	4-48/64	4-51/64	F64G-4813
	4-52/64	4-55/64	F64G-4875
	4-56/64	4-59/64	F64G-4938
	5-5/64	5-8/64	F64G-5141

Sanitary Caps

Size	Part #
1	16AMP-G100
1 1/2	16AMP-G150
2	16AMP-G200
3	16AMP-G300
4	16AMP-G400

White Sanitary Gaskets

Size	Part #
1	40MP-UW100
1 1/2	40MP-UW150
2	40MP-UW200
3	40MP-UW300
4	40MP-UW400

Black Sanitary Gaskets

Size	Part #
1	40MP-U100
1 1/2	40MP-U150
2	40MP-U200
3	40MP-U300
4	40MP-U400

Flanges

TTMA

Size	Steel Punched	Steel Plate	St. Steel Punched	Alumn Plate	Steel Cap Flange	St. Steel Cap Flange	Alum Cap Flange
2	20079A	WF201MS	S20079A	20189A	20518	S20518	20661A
3	20056A	WF301MS	S20056A	20189C	20520	S20520	20661C
4	20080A	WF401MS	S20080A	20189D	20521	S20521	20661D
5	20290A	WF501MS	S20290A	-	20522	S20522	-
6	20167A	WF601MS	S20167A	20189E	20553	S20553	20661E

150# Flange ANSI B16.5

Size	CS RF Slip On	CS Weld Neck	CS Threaded	CS Blind	316SS RF Slip On	316SS Weld Neck	316SS Threaded	316SS Blind
1/2	CSF150SL050	CSF150WN050	CSF150TH050	CSF150BL050	SSF150SL050	SSF150WN050	SSF150TH050	SSF150BL050
3/4	CSF150SL075	CSF150WN075	CSF150TH075	CSF150BL075	SSF150SL075	SSF150WN075	SSF150TH075	SSF150BL075
1	CSF150SL100	CSF150WN100	CSF150TH100	CSF150BL100	SSF150SL100	SSF150WN100	SSF150TH100	SSF150BL100
1 1/4	CSF150SL125	CSF150WN125	CSF150TH125	CSF150BL125	SSF150SL125	SSF150WN125	SSF150TH125	SSF150BL125
1 1/2	CSF150SL150	CSF150WN150	CSF150TH150	CSF150BL150	SSF150SL150	SSF150WN150	SSF150TH150	SSF150BL150
2	CSF150SL200	CSF150WN200	CSF150TH200	CSF150BL200	SSF150SL200	SSF150WN200	SSF150TH200	SSF150BL200
2 1/2	CSF150SL250	CSF150WN250	CSF150TH250	CSF150BL250	SSF150SL250	SSF150WN250	SSF150TH250	SSF150BL250
3	CSF150SL300	CSF150WN300	CSF150TH300	CSF150BL300	SSF150SL300	SSF150WN300	SSF150TH300	SSF150BL300
4	CSF150SL400	CSF150WN400	CSF150TH400	CSF150BL400	SSF150SL400	SSF150WN400	SSF150TH400	SSF150BL400
6	CSF150SL600	CSF150WN600	CSF150TH600	CSF150BL600	SSF150SL600	SSF150WN600	SSF150TH600	SSF150BL600
8	CSF150SL800	CSF150WN800	CSF150TH800	CSF150BL800	SSF150SL800	SSF150WN800	SSF150TH800	SSF150BL800

300# Flange ANSI B16.5

Size	CS RF Slip On	CS Weld Neck	CS Threaded	CS Blind	316SS RF Slip On	316SS Weld Neck	316SS Threaded	316SS Blind
1/2	CSF300SL050	CSF300WN050	CSF300TH050	CSF300BL050	SSF300SL050	SSF300WN050	SSF300TH050	SSF300BL050
3/4	CSF300SL075	CSF300WN075	CSF300TH075	CSF300BL075	SSF300SL075	SSF300WN075	SSF300TH075	SSF300BL075
1	CSF300SL100	CSF300WN100	CSF300TH100	CSF300BL100	SSF300SL100	SSF300WN100	SSF300TH100	SSF300BL100
1 1/4	CSF300SL125	CSF300WN125	CSF300TH125	CSF300BL125	SSF300SL125	SSF300WN125	SSF300TH125	SSF300BL125
1 1/2	CSF300SL150	CSF300WN150	CSF300TH150	CSF300BL150	SSF300SL150	SSF300WN150	SSF300TH150	SSF300BL150
2	CSF300SL200	CSF300WN200	CSF300TH200	CSF300BL200	SSF300SL200	SSF300WN200	SSF300TH200	SSF300BL200
2 1/2	CSF300SL250	CSF300WN250	CSF300TH250	CSF300BL250	SSF300SL250	SSF300WN250	SSF300TH250	SSF300BL250
3	CSF300SL300	CSF300WN300	CSF300TH300	CSF300BL300	SSF300SL300	SSF300WN300	SSF300TH300	SSF300BL300
4	CSF300SL400	CSF300WN400	CSF300TH400	CSF300BL400	SSF300SL400	SSF300WN400	SSF300TH400	SSF300BL400
6	CSF300SL600	CSF300WN600	CSF300TH600	CSF300BL600	SSF300SL600	SSF300WN600	SSF300TH600	SSF300BL600
8	CSF300SL800	CSF300WN800	CSF300TH800	CSF300BL800	SSF300SL800	SSF300WN800	SSF300TH800	SSF300BL800

Male Spud

Size	Domestic Part #	Import Part #
1/4	-	-
3/8	DGMC	IGMC
1/2	DGM3	IGM3
3/4	DGM8	IGM8
1	DGM13	IGM13
1 1/4	DGM18	IGM18
1 1/2	DGM23	IGM23
2	DGM28	IGM28
2 1/2	DGM33	IGM33
3	DGM38	IGM38
4	-	-
6	-	-

Coupling with Female Spud

Size	Part #
1/4	DGF1
3/8	DGF3
1/2	DGF6
3/4	DGF26
1	DGF36
1 1/4	DGF51
1 1/2	DGF61
2	DGF81
2 1/2	DGF96
3	DGF111
4	DGF141
6	DGF201

Female Spud

Size	Domestic Part #	Import Part #
1/4	DGBC	IGBC
3/8	DGCC	IGCC
1/2	DGB3	IGB3
3/4	DGB8	IGB8
1	DGB13	IGB13
1 1/4	DGB18	IGB18
1 1/2	DGB2	IGB2
2	DGB28	IGB28
2 1/2	DGB33	IGB33
3	DGB38	IGB38
4	DGB48	IGB48
6	DGB68	IGB68

Stem

Size	Domestic Part #	Import Part #
1/4	DGBA	IGBA
3/8	DGCA	IGCA
1/2	DGB1	IGB1
3/4	DGB6	IGB6
1	DGB11	IGB11
1 1/4	DGB16	IGB16
1 1/2	DGB21	IGB21
2	DGB26	IGB26
2 1/2	DGB31	IGB31
3	DGB36	IGB36
4	DGB46	IGB46
6	DGB66	IGB66

Double Spud

Size	Domestic Part #	Import Part #
1/4	-	-
3/8	-	-
1/2	DGDB3	IGDB3
3/4	DGDB13	IGDB13
1	DGDB13	IGDB13
1 1/4	DGDB23	IGDB23
1 1/2	DGDB23	IGDB23
2	DGDB28	IGDB28
2 1/2	DGDB33	IGDB33
3	DGDB38	IGDB38
4	-	-
6	-	-

Wing Nut

Size	Domestic Part #	Import Part #
1/4	DSLS4	ISLS4
3/8	DCB	ICB
1/2	DB2	IB2
3/4	DB12	IB12
1	DB12	IB12
1 1/4	DB17	IB17
1 1/2	DB17	IB17
2	DB27	IB27
2 1/2	DB32	IB32
3	DB37	IB37
4	DB47	IB47
6	DB67	IB67

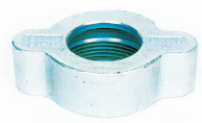

Male Crimp Stem Fitting

Hose	NPT	Domestic Part #	Import Part #
1/4	1/8	DMS4X2	IMS4X2
1/4	1/4	DMSA	IMSA
1/4	3/8	DMSB	IMSB
3/8	1/4	DMS6X4	IMS6X4
3/8	3/8	DMSC	IMSC
3/8	1/2	DMS6X8	IMS6X8
1/2	1/4	DMS8X4	IMS8X4
1/2	3/8	DMS8X6	IMS8X6
1/2	1/2	DMS1	IMS1
1/2	3/4	DMS8X12	IMS8X12
3/4	1/2	DMS12X8	IMS12X8
3/4	3/4	DMS6	IMS6
3/4	1	DMS12X16	IMS12X16
1	3/4	DMS16X12	IMS16X12
1	1	DMS11	IMS11
1 1/4	1 1/4	DMS16	IMS16
1 1/2	1 1/2	DMS21	IMS21
2	2	DMS26	IMS26
2 1/2	2 1/2	DMS31	IMS31
3	3	DMS36	IMS36
4	4	DMS46	IMS46

2-Bolt Type

Hose I.D.	Hose O.D. From	Hose O.D. To	Plated Iron Domestic	Plated Iron Import
1/4	36/64	42/64	DBD	IBD
3/8	44/64	56/64	DCD	ICD
1/2	52/64	60/64	DDD	IDD
1/2	60/64	1 4/64	DB4	IB4
1/2	1 4/64	1 12/64	DB5	IB5
3/4	1 10/64	1 20/64	DBU9	IBU9
3/4	1 20/64	1 32/64	DB9	IB9
3/4	1 32/64	1 44/64	DB10	IB10

4-Bolt Type 2 Gripping Fingers

Hose I.D.	Hose O.D. From	Hose O.D. To	Plated Iron Domestic	Plated Iron Import
1/2	58/64	1 2/64	D968*	I968*
1	1 26/64	1 36/64	D156*	I156*
1	1 34/64	1 46/64	DBU14	IBU14
1	1 44/64	1 60/64	DB14	IB14
1	1 60/64	2 8/64	DB15	IB15
1 1/4	1 32/64	1 50/64	DBU18	IBU18
1 1/4	1 44/64	1 56/64	D187*	I187*
1 1/4	1 50/64	2 6/64	DBU19	IBU19
1 1/4	1 56/64	2 4/64	D206*	I206*
1 1/4	2 8/64	2 24/64	DB19	IB19
1 1/2	1 52/64	2	DBU22	IBU22
1 1/2	2	2 14/64	DB22	IB22
1 1/2	2	2 8/64	D212*	I212*
1 1/2	2 4/64	2 16/64	D225*	I225*
1 1/2	2 12/64	2 24/64	DBU24	IBU24
1 1/2	2 24/64	2 36/64	DB24	IB24
1 1/2	2 36/64	2 48/64	DB25	IB25
2	2 16/64	2 32/64	D250*	I250*
2	2 22/64	2 34/64	DBU28	IBU28
2	2 32/64	2 48/64	D275*	I275*
2	2 32/64	2 50/64	DBU29	IBU29
2	2 48/64	3 4/64	DB29	IB29
2	2 48/64	3 4/64	D306*	I306*
2	3 6/64	3 28/64	DB30	IB30

* 4 gripping fingers

Bauer Coupling - Ball

Size	Plated	Unplated
2	S1PL50	S1BK50
2 1/2	S1PL76	S1BK76
3	S1PL89	S1BK89
4	S1PL108	S1BK108
5	S1PL133	S1BK133
6	S1PL159	S1BK159
8	S1PL194	S1BK194

Bauer Coupling - Socket with Shank

Size	Plated	Unplated
4	S78PL108	S78BK108
5	S78PL133	S78BK133
6	S78PL159	S78PL159
8	S78PL194	S78PL194

Bauer Coupling - Ball with Shank

Size	Plated	Unplated
4	S77PL108	S77BK108
5	S77PL133	S77PL133
6	S77PL159	S77PL159
8	S77PL194	S77PL194

Bauer Coupling - Rubber Seal

Size	Part #
2	S4GK50
2 1/2	S4GK76
3	S4GK89
4	S4GK108
5	S4GK133
6	S4GK159
8	S4GK194

Bauer Coupling - Socket

Size	Plated	Unplated
2	S3PL50	S3BK50
2 1/2	S3PL76	S3BK76
3	S3PL89	S3BK89
4	S3PL108	S3BK108
5	S3PL133	S3BK133
6	S3PL159	S3BK159
8	S3PL194	S3BK194

Bauer Coupling - Lever Closing Ring

Size	Plated	Unplated
2	S2PL50	S2BK50
2 1/2	S2PL76	S2BK76
3	S2PL89	S2BK89
4	S2PL108	S2BK108
5	S2PL133	S2BK133
6	S2PL159	S2BK159
8	S2PL194	S2BK194

Bauer Coupling - End Cap

Size	Plated
2	S8PL50
2 1/2	S8PL76
3	S8PL89
4	S8PL108
5	S8PL133
6	S8PL159
8	S8PL194

Ontario Hose Specialties Limited ¢ Tel: 905 670-0113 ¢ Fax: 905 670-4958 ¢ web: www.ontariohose.com

Bush Hog - Female Coupler

Size	Part #
2 1/2	WSRLF250
3	WSRLF300
4	WSRLF400
6	WSRLF600
8	WSRLF800
10	WSRLF1000

Bush Hog - Male Coupler

Size	Part #
2 1/2	WSRLM250
3	WSRLM300
4	WSRLM400
6	WSRLM600
8	WSRLM800
10	WSRLM1000

Bush Hog - Reducer

Size	Part #
4 x 3	WSRLR304
6 x 4	WSRLR406
8 x 4	WSRLR408
8 x 6	WSRLR608
10 x 8	WSRLR8010
10	WSRLR1000

Bush Hog - End Plug

Size	Part #
3	WSRLEP300
4	WSRLEP400
6	WSRLEP600
8	WSRLEP800
10	WSRLEP1000

Bush Hog - End Cap

Size	Part #
3	WSRFEP300
4	WSRFEP400
6	WSRFEP600
8	WSRFEP800
10	WSRFEP1000

Bush Hog - 90° Elbow

Size	Part #
3	WSRLFE300
4	WSRLFE400
6	WSRLFE600
8	WSRLFE800
10	WSRLFE1000

Bush Hog - Wye

Size	Part #
4 x 3 x 3	WSRLY433
6 x 3 x 3	WSRLY633
6 x 4 x 4	WSRLY644
8 x 4 x 4	WSRLY844
8 x 6 x 6	WSRLY866

Bush Hog - 45° Elbow

Size	Part #
3	WSRLR30045
4	WSRLR40045
6	WSRLR60045
8	WSRLR80045
10	WSRLR100045

Bush Hog - Square Back Gasket

Size	Part #
3	WSRLG300
4	WSRLG400
6	WSRLG600
8	WSRLG800
10	WSRLG1000

Bush Hog - Relief Valve

Size	Part #
4	BL400
6	BL600
8	BL800

Dig Tube Clamp

Size	Part #
4	U46478
6	U32087
8	U16584

Vactor CS Flange

Size	Part #
4	CSCF400
6	CSCF600
8	CSCF800

Rainway Clamp

Size	Part #
4	HPRLC400
6	HPRLC600
8	HPRLC800

Aluminum Rainway Gaskets

Size	Part #
4	HPRWG400
6	HPRWG600
8	HPRWG800

Rainway Male Aluminum Ring

Size	Part #
4	HPM400
6	HPM600
8	HPM800

Rainway Female Aluminum Ring

Size	Part #
4	HPF400
6	HPF600
8	HPF800

Flat Flange

Size	Part #
6	U40011B
8	U40011A

Crown

Size	Part #
6	V23766A
8	V23788A

Urethane Tip

Size	Part #
6	SLV6X8
8	SLV8X8

Aluminum Dig Tubes 120 Wall

6″ Male x Female Bush Hogs

Size	Part #
24″	ALT6X24ALMFBH
36″	ALT6X36ALMFBH
48″	ALT6X48ALMFBH
60″	ALT6X60ALMFBH
72″	ALT6X72ALMFBH
84″	ALT6X84ALMFBH
96″	ALT6X96ALMFBH
120″	ALT6X120ALMFBH

8″ Male x Female Bush Hogs

Size	Part #
24″	ALT8X24ALMFBH
36″	ALT8X36ALMFBH
48″	ALT8X48ALMFBH
60″	ALT8X60ALMFBH
72″	ALT8X72ALMFBH
84″	ALT8X84ALMFBH
96″	ALT8X96ALMFBH
120″	ALT8X120ALMFBH

6″ Flat Flange x Flate Flange

Size	Part #
24″	ALT6X24VFXVF
36″	ALT6X36VFXVF
48″	ALT6X48VFXVF
60″	ALT6X60VFXVF
72″	ALT6X72VFXVF
84″	ALT6X84VFXVF
96″	ALT6X96VFXVF
120″	ALT6X120VFXVF

8″ Flat Flange x Flate Flange

Size	Part #
24″	ALT8X24VFVF
36″	ALT8X36VFVF
48″	ALT8X48VFVF
60″	ALT8X60VFVF
72″	ALT8X72VFVF
84″	ALT8X84VFVF
96″	ALT8X96VFVF
120″	ALT8X120VFVF

6″ Male Bush Hog x Urethane Tip

Size	Part #
60″	ALT6X60ALMBHXUSL
72″	ALT6X72ALMBHXUSL
84″	ALT6X84ALMBHXUSL

8″ Male Bush Hog x Urethane Tip

Size	Part #
60″	ALT8X60ALMBHXUSL
72″	ALT8X72ALMBHXUSL
84″	ALT8X84ALMBHXUSL

6″ Flat Flange x Urethane Tip

Size	Part #
60″	ALT6X60VFXUSL
72″	ALT6X72VFXUSL
84″	ALT6X84VFXUSL

8″ Flat Flange x Urethane Tip

Size	Part #
60″	ALT8X60VFXUSL
72″	ALT8X72VFXUSL
84″	ALT8X84VFXUSL

6″ Male Bush Hog x Nozzle (CROWN)

Size	Part #
60″	ALT6X60ALMBHXCROWN
72″	ALT6X72ALMBHXCROWN
84″	ALT6X84ALMBHXCROWN

8″ Male Bush Hog x Nozzle (CROWN)

Size	Part #
60″	ALT8X60ALMBHXCR
72″	ALT8X72ALMBHXCR
84″	ALT8X84ALMBHXCR

6" Vactor Flange x Urethane Tip

Size	Part #
72"	HTEC-6X6DT

8" Vactor Flange x Urethane Tip

Size	Part #
72"	HTEC-8X6DT

6" Vactor Flange x Vactor Flange

Size	Part #
72"	HTEC-6X6EX

8" Vactor Flange x Vactor Flange

Size	Part #
72"	HTEC-8X6EX

6" Male Bush Hog x Urethane Tip

Size	Part #
72"	HTEC-6X6HL

8" Male Bush Hog x Urethane Tip

Size	Part #
72"	HTEC-8X6HL

Orifice Size	Part #
6.0	HTEC-2250-06

Orifice Size	Part #
8.0	HTEC-2250-06

Hydrotec Nozzles Feature:

- Carbide Spray Tips
- Non-conductive urethane wrap
- 1/2" NPT Connections
- Maximum Temperature of 180°F (82°C)
- Maximum Working Pressure of 3200PSI

Ripsaw Rotating Turbo Nozzle

Dig Faster, Save Water

The Ripsaw blasts a 0 degree straight water stream at up to 3200 PSI while rotating at a high speed to provide an 18 degree cone of coverage. The cone-shaped flow pattern is ideally suited for pot-holing applications.

NEW HEAVY DUTY COATING AVAILABLE!
The new ripsaw HD was engineered for improved performance in harsh conditions. The special coating provides longer life in aggressive environments such as frost, shale and other rocky conditions.

Part#:
1001857

Part#:
1002719

NEW Heavy Duty Green Coating!

Orifice Size	Inlet (in)	Max Flow Rate (GPM)
4.0	1/2	3.6
5.0	1/2	4.5
6.0	1/2	5.4
8.0	1/2	7.2
10.0	1/2	8.9

Switchblade™ Static, Zero-Degree Nozzle – 3200 PSI

Dig Faster, Save Water

The Switchblade™ nozzle is designed and engineered for the rugged Hydro-Excavation industry. These heavy-duty, high-impact nozzles allow you to cut through dirt faster while using dramatically less water.

Complete jobs faster with more runtime and less downtime. A combination of (1), (2), or (4) 0° solid stream nozzles are available. The Switchblade's long, linear flow path is ideally suited for trenching applications.

Part#: 1002036
Comes with one 0° nozzle

Part#: 1002035
Comes with two 0° nozzle

Part#: 1001928
Comes with four 0° nozzle

The increased tearing action of the rotating spray is ideal for hard surface applications, such as concrete graffiti cleaning or caked on mud on heavy equipment

- Increases cleaning efficiency as much as 200%.
- The 0° rotation creates a cleaning and tearing action.
- Ideal for hard surfaces
- Improved materials for longer life

ST-457-5.0 - Black

Orfice Size: 5.0
Gallons Per Minute: 6.1

ST-457-6.0 - Red

Orfice Size: 6.0
Gallons Per Minute: 7.3
Inlet Size: 1/2” FNPT

ST-457-7.0 - Pink

Orfice Size: 7.0
Gallons Per Minute: 8.6

ST-457-8.0 - Orange

Orfice Size: 8.0
Gallons Per Minute: 9.8

ST-457-10.0 - Grey

Orfice Size: 10.0
Gallons Per Minute: 12.2

Additional pressure ratings, orifice sizes, inlet connections and materials available upon request

NEW Linear Excavating Gun

Temp: 300°F
Flow Rate: 16 GPM
Inlet: 1/2” FPT
Outlet: 1/2” FPT

3200 PSI

ST-1100 Spray Gun

Temp: 300°F
Flow Rate: 7 GPM
Inlet: 3/8” FPT
Outlet: 1/4” FPT
Weight: 0.94 lb

3050 PSI

ST-601 Spray Gun

Temp: 300°F
Flow Rate: 12 GPM
Inlet: 3/8” FPT
Outlet: 1/4” FPT
Weight: 1.16 lb

4000 PSI

ST-1500 Spray Gun

Temp: 300°F
Flow Rate: 10.4 GPM
Inlet: 3/8” FPT
Outlet: 1/4” FPT
Weight: 1.27 lb

5000 PSI

ST-2305 Spray Gun

Temp: 300°F
Flow Rate: 12 GPM
Inlet: 3/8” FPT
Outlet: 1/4” FPT
Weight: 1.22 lb

5000 PSI

ST-2605 Spray Gun

Temp: 300°F
Flow Rate: 12 GPM
Inlet: 3/8” FPT
Outlet: 1/4” FPT
Weight: 1.28 lb

5000 PSI

Lances

ST-003 Lance

Pressure: 6000PSI
Temp: 300°F
Length: 79”
Inlet: 1/4” MPT
Outlet: 1/4” MPT

ST-007 Molded Grip Lance

Pressure: 6000PSI
Temp: 300°F
Length: 79”
Inlet: 1/4” MPT
Outlet: 1/4” MPT

Unplated Steel NPT Ends

Size	Domestic Part #	Import Part #
1/2	DST050	IST050
3/4	DST075	IST075
1	DST100	IST100
1 1/4	DST125	IST125
1 1/2	DST150	IST150
2	DST200	IST200
2 1/2	DST250	IST250
3	DST300	IST300
4	DST400	IST400
5	DST500	IST500
6	DST600	IST600
8	DST800	IST800
10	DST1000	IST1000
12	DST1200	IST1200

Plated Steel NPT Ends

Size	Domestic Part #	Import Part #
1/2	DSTC050	ISTC050
3/4	DSTC075	ISTC075
1	DSTC100	ISTC100
1 1/4	DSTC125	ISTC125
1 1/2	DSTC150	ISTC150
2	DSTC200	ISTC200
2 1/2	DSTC250	ISTC250
3	DSTC300	ISTC300
4	DSTC400	ISTC400
5	DSTC500	ISTC500
6	DSTC600	ISTC600
8	DSTC800	ISTC800
10	DSTC1000	ISTC1000
12	DSTC1200	ISTC1200

Brass NPT Ends

Size	Domestic Part #	Import Part #
1/2	DBST050	IBST050
3/4	DBST075	IBST075
1	DBST100	IBST100
1 1/4	DBST125	IBST125
1 1/2	DBST150	IBST150
2	DBST200	IBST200
2 1/2	DBST250	IBST250
3	DBST300	IBST300
4	DBST400	IBST400
5	-	-

Aluminum Butt Ends

Size	Domestic Part #	Import Part #
1/2	-	-
3/4	-	-
1	-	-
1 1/4	-	-
1 1/2	-	-
2	DASTB200	-
2 1/2	-	-
3	DASTB300	-
4	DASTB400	-
5	-	-
6	-	-

316 Stainless Steel NPT Ends

Size	Domestic Part #	Import Part #
1/2	DRST050	IRST050
3/4	DRST075	IRST075
1	DRST100	IRST100
1 1/4	DRST125	IRST125
1 1/2	DRST150	IRST150
2	DRST200	IRST200
2 1/2	DRST250	-
3	DRST300	IRST300
4	DRST400	IRST400
5	DRST500	-
6	DRST600	IRST600
8	DRST800	-

Aluminum NPT Ends

Size	Domestic Part #	Import Part #
1/2	DAST050	-
3/4	DAST075	IAST075
1	DAST100	IAST100
1 1/4	DAST125	IAST125
1 1/2	DAST150	IAST150
2	DAST200	IAST200
2 1/2	DAST250	IAST250
3	DAST300	IAST300
4	DAST400	IAST400
5	DAST500	-
6	DAST600	-

Unplated Steel Butt Ends

Size	Domestic Part #
1/2	DSTB050
3/4	DSTB075
1	DSTB100
1 1/4	DSTB125
1 1/2	DSTB150
2	DSTB200
2 1/2	DSTB250
3	DSTB300
4	DSTB400
5	DSTB500
6	DSTB600
8	DSTB800
10	DSTB1000
12	DSTB1200

Unplated Steel Grooved Ends

Size	Import Part #
1	-
1 1/4	-
1 1/2	ISTV150
2	ISTV200
2 1/2	ISTV250
3	ISTV300
4	ISTV400
5	-
6	ISTV600
8	ISTV800
10	ISTV1000
12	ISTV1200

Plated Hose Mender

Size	Import Part #
1/4	IHMC025
3/8	IHMC038
1/2	IHMC050
3/4	IHMC075
1	IHMC100
1 1/4	IHMC125
1 1/2	IHMC150
2	IHMC200
2 1/2	IHMC250
3	IHMC300
4	IHMC400
5	IHMC500
6	IHMC600
8	IHMC800
10	IHMC1000
12	IHMC1200

Unplated Hose Mender

Size	Domestic Part #	Import Part #
1/4	DHM025	-
3/8	DHM038	IHM038
1/2	DHM050	IHM050
3/4	DHM075	IHM075
1	DHM100	IHM100
1 1/4	DHM125	IHM125
1 1/2	DHM150	IHM150
2	DHM200	IHM200
2 1/2	DHM250	IHM250
3	DHM300	IHM300
4	DHM400	IHM400
5	DHM500	IHM500
6	DHM600	IHM600
8	DHM800	IHM800
10	DHM1000	IHM1000
12	DHM1200	IHM1200

Brass Barbed Hose Mender

Size	Part #
3/16	BM15
1/4	BM2
5/16	BM25
3/8	BM3
1/2	BM4
3/4	BM6
1	BM8

Stainless Steel Mender

Size	Domestic Part #
1	DHMSS100
1 1/4	DHMSS125
1 1/2	DHMSS150
2	DHMSS200
3	DHMSS300
4	DHMSS400

Female Garden Hose

Hose ID	Part #
3/8	BCF73
1/2	BCF74
5/8	BCF75
3/4	BCF76

Male Garden Hose

Hose ID	Part #
3/8	BCM73
1/2	BCM74
5/8	BCM75
3/4	BCM76

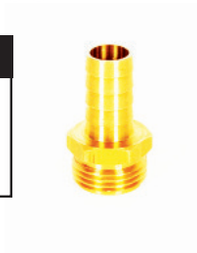

Male GHT x Male GHT

Type	Part #
GHT x GHT	BA777

Female GHT x Female GHT

Type	Part #
GHT x GHT	BA977

Male GHT x Male NPT

NPT Size	Part #
GHT x 3/8"NPT	BA73
GHT x 1/2"NPT	BA74
GHT x 3/4"NPT	BA776

Female GHT x Male NPT

NPT Size	Part #
GHT x 1/2"NPT	BMA974
GHT x 3/4"NPT	BMA976
GHT x 1"NPT	FM7610T

Female Rigid (GHT x NPT)

NPT Size	Part #
GHT x 1/2"NPT	BA974
GHT x 3/4"NPT	BA976

Female GHT Swivel x Female NPT

NPT Size	Part #
GHT x 1/2"NPT	BAS974
GHT x 3/4"NPT	BAS976

Male Inserts (NPT)

Hose	NPT	Part #
1/8	1/8	BN012012
3/16	1/8	BN019012
3/16	1/4	BN019025
1/4	1/8	BN025012
1/4	1/4	BN025025
1/4	3/8	BN025038
5/16	1/8	BN031012
5/16	1/4	BN031025
5/16	3/8	BN031038
3/8	1/8	BN038012
3/8	1/4	BN038025
3/8	3/8	BN038038
3/8	1/2	BN038050
1/2	1/4	BN050025
1/2	3/8	BN050038
1/2	1/2	BN050050
1/2	3/4	BN050075
5/8	3/8	BN058038
5/8	1/2	BN058050
5/8	3/4	BN058075
3/4	1/2	BN075050
3/4	3/4	BN075075
1	3/4	BN100075
1	1	BN100100

Female Ball End Swivel (NPT)

Hose	NPT	Part #
1/8	1/8	BFS012012
3/16	1/8	BFS019012
3/16	1/4	BFS019025
1/4	1/4	BFS025025
5/16	1/4	BFS031025
3/8	1/4	BFS038025
3/8	3/8	BFS038038
1/2	1/2	BFS050050
3/4	3/4	BFS075075

Morris Compression Couplings

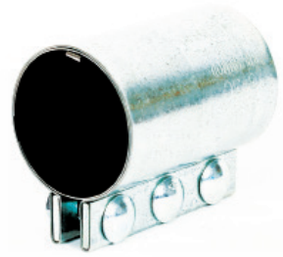

Coupling Material
- Made of heavy gauge zinc plated steel.

Also available in aluminum or stainless steel on special request.

Gasket Material
- Gasket is black or white rubber neoprene, please specify by adding a B for Black or W for White to the part number, i.e. 2 1/4-3COD-W.

*static grounding strip available on request

Size (in.)	Type	O.D. (in.)	Length (in.)	# of Bolts	Size of Bolts	Weight (lbs./ft.)	White Part #	Black Part #
1/2	Pipe	0.840	2	2	5/16 x 1 1/4	0.5	MC050WH2C	MC050BK2C
3/4	Pipe	1.050	2	2	5/16 x 1 1/4	0.7	MC075WH2C	MC075BK2C
1	Tubing	1.000	2	2	5/16 x 1 1/4	1.6	MC100WH2COD	MC100BK2COD
1	Pipe	1.315	4	2	1/2 x1 3/4	1.6	MC100WH2C	MC100BK2C
1 1/4	Tubing	1.250	4	2	1/2 x1 3/4	1.9	MC125WH2COD	MC125BK2COD
1 1/4	Pipe	1.660	4	2	1/2 x1 3/4	1.8	MC125WH2C	MC125BK2C
1 1/4	Pipe	1.660	6	3	1/2 x1 3/4	3.0	MC125WH3C	MC125BK3C
1 1/2	Tubing	1.500	4	2	1/2 x1 3/4	2.0	MC150WH2COD	MC150BK2COD
1 1/2	Tubing	1.500	6	3	1/2 x1 3/4	2.9	MC150WH3COD	MC150BK3COD
1 1/2	Pipe	1.900	4	2	1/2 x1 3/4	2.0	MC150WH2C	MC150BK2C
1 1/2	Pipe	1.900	6	3	1/2 x1 3/4	3.1	MC150WH3C	MC150BK3C
1 3/4	Tubing	1.750	4	2	1/2 x1 3/4	2.1	MC175WH2COD	MC175BK2COD
1 3/4	Tubing	1.750	6	3	1/2 x1 3/4	3.0	MC175WH3COD	MC175BK3COD
2	Tubing	2.000	4	2	1/2 x1 3/4	2.1	MC200WH2COD	MC200BK2COD
2	Tubing	2.000	6	3	1/2 x1 3/4	3.1	MC200WH3COD	MC200BK3COD
2	Pipe	2.375	4	2	1/2 x1 3/4	2.2	MC200WH2C	MC200BK2C
2	Pipe	2.375	6	3	1/2 x1 3/4	3.5	MC200WH3C	MC200BK3C
2	Pipe	2.375	8	4	1/2 x1 3/4	4.7	MC200WH4C	MC200BK4C
2 1/8	Tubing	2.125	4	2	1/2 x1 3/4	2.1	MC213WH2COD	MC213BK2COD
2 1/8	Tubing	2.125	6	3	1/2 x1 3/4	3.2	MC213WH3COD	MC213BK3COD
2 3/16	Tubing	2.187	4	2	1/2 x1 3/4	2.2	MC219WH2COD	MC219BK2COD
2 3/16	Tubing	2.187	6	3	1/2 x1 3/4	3.3	MC219WH3COD	MC219BK3COD
2 1/4	Tubing	2.250	4	2	1/2 x1 3/4	2.2	MC225WH2COD	MC225BK2COD
2 1/4	Tubing	2.250	6	3	1/2 x1 3/4	3.3	MC225WH3COD	MC225BK3COD
2 1/2	Tubing	2.500	4	2	1/2 x1 3/4	2.6	MC250WH2COD	MC250BK2COD
2 1/2	Tubing	2.500	6	3	1/2 x1 3/4	3.4	MC250WH3COD	MC250BK3COD
2 1/2	Pipe	2.875	4	2	1/2 x1 3/4	2.4	MC250WH2C	MC250BK2C
2 1/2	Pipe	2.875	6	3	1/2 x1 3/4	3.7	MC250WH3C	MC250BK3C
2 1/2	Pipe	2.875	8	4	1/2 x1 3/4	5.0	MC250WH4C	MC250BK4C
2 3/4	Tubing	2.750	6	3	1/2 x1 3/4	3.6	MC275WH3COD	MC275BK3COD
3	Tubing	3.000	4	2	5/8 x 2	3.2	MC300WH2COD	MC300BK2COD
3	Tubing	3.000	6	3	5/8 x 2	4.5	MC300WH3COD	MC300BK3COD
3	Tubing	3.000	8	4	5/8 x 2	5.9	MC300WH4COD	MC300BK4COD
3	Pipe	3.500	4	2	5/8 x 2	3.4	MC300WH2C	MC300BK2C
3	Pipe	3.500	6	3	5/8 x 2	5.1	MC300WH3C	MC300BK3C
3	Pipe	3.500	8	4	5/8 x 2	6.6	MC300WH4C	MC300BK4C
3 1/4	Tubing	3.250	4	2	5/8 x 2	3.5	MC325WH2COD	MC325BK2COD
3 1/4	Tubing	3.250	6	3	5/8 x 2	5.0	MC325WH3COD	MC325BK3COD
3 1/4	Tubing	3.250	8	4	5/8 x 2	6.5	MC325WH4COD	MC325BK4COD
3 1/2	Tubing	3.500	4	2	5/8 x 2	3.4	MC300WH2C	MC300BK2C
3 1/2	Tubing	3.500	6	3	5/8 x 2	5.1	MC300WH3C	MC300BK3C
3 1/2	Tubing	3.500	8	4	5/8 x 2	6.6	MC300WH4C	MC300BK4C
3 1/2	Pipe	4.000	4	2	5/8 x 2	3.7	MC350WH2C	MC350BK2C
3 1/2	Pipe	4.000	6	3	5/8 x 2	5.3	MC350WH3C	MC350BK3C
3 1/2	Pipe	4.000	8	4	5/8 x 2	7.2	MC350WH4C	MC350BK4C
3 3/4	Tubing	3.750	6	3	5/8 x 2	5.6	MC375WH3COD	MC375BK3COD
3 3/4	Tubing	3.750	8	4	5/8 x 2	7.4	MC375WH4COD	MC375BK4COD

Size (in.)	Type	O.D. (in.)	Length (in.)	# of Bolts	Size of Bolts	Weight (lbs./ft.)	White Part #	Black Part #
4	Tubing	4.000	4	2	5/8 x 2	3.7	MC350WH2C	MC350BK2C
4	Tubing	4.000	6	3	5/8 x 2	5.3	MC350WH3C	MC350BK3C
4	Tubing	4.000	8	4	5/8 x 2	7.2	MC350WH4C	MC350BK4C
4	Pipe	4.500	4	2	5/8 x 2	3.8	MC400WH2C	MC400BK2C
4	Pipe	4.500	6	3	5/8 x 2	5.5	MC400WH3C	MC400BK3C
4	Pipe	4.500	8	4	5/8 x 2	7.7	MC400WH4C	MC400BK4C
4 1/4	Tubing	4.250	6	3	5/8 x 2	5.5	MC425WH3COD	MC425BK3COD
4 1/4	Tubing	4.250	8	4	5/8 x 2	7.0	MC425WH4COD	MC425BK4COD
4 1/2	Tubing	4.500	4	2	5/8 x 2	3.8	MC400WH2C	MC400BK2C
4 1/2	Tubing	4.500	6	3	5/8 x 2	5.5	MC400WH3C	MC400BK3C
4 1/2	Tubing	4.500	8	4	5/8 x 2	7.7	MC400WH4C	MC400BK4C
4 1/2	Pipe	5.563	4	2	5/8 x 2	4.2	MC450WH2C	MC450BK2C
4 1/2	Pipe	5.563	6	3	5/8 x 2	6.2	MC450WH3C	MC450BK3C
4 1/2	Pipe	5.563	8	4	5/8 x 2	8.1	MC450WH4C	MC450BK4C
4 3/4	Tubing	4.750	6	3	5/8 x 2	6.5	MC475WH3COD	MC475BK3COD
4 3/4	Tubing	4.750	8	4	5/8 x 2	8.6	MC475WH4COD	MC475BK4COD
5	Tubing	5.000	4	2	5/8 x 2	4.2	MC450WH2C	MC450BK2C
5	Tubing	5.000	6	3	5/8 x 2	6.2	MC450WH3C	MC450BK3C
5	Tubing	5.000	8	4	5/8 x 2	8.1	MC450WH4C	MC450BK4C
5	Pipe	5.563	4	2	5/8 x 2	4.6	MC500WH2C	MC500BK2C
5	Pipe	5.563	6	3	5/8 x 2	6.8	MC500WH3C	MC500BK3C
5	Pipe	5.563	8	4	5/8 x 2	8.8	MC500WH4C	MC500BK4C
5 1/4	Tubing	5.250	6	3	5/8 x 2	6.6	MC525WH3COD	MC525BK3COD
5 1/2	Tubing	5.500	6	3	5/8 x 2	6.8	MC550WH3COD	MC550BK3COD
5 1/2	Tubing	5.500	8	4	5/8 x 2	9.0	MC550WH4COD	MC550BK4COD
5 3/4	Tubing	5.750	6	3	5/8 x 2	7.8	MC575WH3COD	MC575BK3COD
5 3/4	Tubing	5.750	8	4	5/8 x 2	9.2	MC575WH4COD	MC575BK4COD
6	Tubing	6.000	4	2	5/8 x 2	4.7	MC600WH2COD	MC600BK2COD
6	Tubing	6.000	6	3	5/8 x 2	7.0	MC600WH3COD	MC600BK3COD
6	Tubing	6.000	8	4	5/8 x 2	9.4	MC600WH4COD	MC600BK4COD
6	Tubing	6.000	10	5	5/8 x 2	11.8	MC600WH5COD	MC600BK5COD
6	Pipe	6.625	4	2	5/8 x 2	5.3	MC600WH2C	MC600BK2C
6	Pipe	6.625	6	3	5/8 x 2	7.8	MC600WH3C	MC600BK3C
6	Pipe	6.625	8	4	5/8 x 2	10.4	MC600WH4C	MC600BK4C
6	Pipe	6.625	10	5	5/8 x 2	14.3	MC600WH5C	MC600BK5C
6 1/4	Tubing	6.250	6	3	5/8 x 2	7.3	MC625WH3COD	MC625BK3COD
6 1/4	Tubing	6.250	8	4	5/8 x 2	10.0	MC625WH4COD	MC625BK4COD
6 1/2	Tubing	6.500	6	3	5/8 x 2	7.5	MC650WH3COD	MC650BK3COD
6 1/2	Tubing	6.500	8	4	5/8 x 2	10.4	MC650WH4COD	MC650BK4COD
6 3/4	Tubing	6.750	6	3	5/8 x 2	7.7	MC675WH3COD	MC675BK3COD
6 3/4	Tubing	6.750	8	4	5/8 x 2	10.8	MC675WH4COD	MC675BK4COD
7	Tubing	7.000	6	3	5/8 x 2	7.9	MC700WH3COD	MC700BK3COD
7	Tubing	7.000	8	4	5/8 x 2	10.8	MC700WH4COD	MC700BK4COD
7	Tubing	7.000	10	5	5/8 x 2	13.7	MC700WH5COD	MC700BK5COD
7 1/4	Tubing	7.250	6	3	5/8 x 2	8.3	MC725WH3COD	MC725BK3COD
7 1/2	Tubing	7.500	6	3	5/8 x 2	8.5	MC750WH4COD	MC750BK4COD
7 1/2	Tubing	7.500	8	4	5/8 x 2	11.3	MC750WH3COD	MC750BK3COD
7 3/4	Tubing	7.750	6	3	5/8 x 2	8.9	MC775WH3COD	MC775BK3COD
8	Tubing	8.000	6	2	5/8 x 2	11.0	MC800WH2COD	MC800BK2COD
8	Tubing	8.000	8	3	5/8 x 2	14.3	MC800WH3COD	MC800BK3COD
8	Tubing	8.000	10	4	5/8 x 2	18.0	MC800WH4COD	MC800BK4COD
8	Tubing	8.000	12	5	5/8 x 2	22.0	MC800WH5COD	MC800BK5COD
8	Pipe	8.625	6	2	5/8 x 2	11.5	MC800WH2C	MC800BK2C
8	Pipe	8.625	8	3	5/8 x 2	14.6	MC800WH3C	MC800BK3C
8	Pipe	8.625	10	4	5/8 x 2	18.8	MC800WH4C	MC800BK4C
8	Pipe	8.625	12	5	5/8 x 2	23.0	MC800WH5C	MC800BK5C
9	Tubing	9.000	8	3	5/8 x 2	15.9	MC900WH3COD	MC900BK3COD
9	Tubing	9.000	10	4	5/8 x 2	19.9	MC900WH4COD	MC900BK4COD

Right Hand Type Power Lock Clamps

Applications:
- Designed to be used with KanaFlex hose type 100 and 180
- Clockwise Spiral

Material:
- Carbon Steel

Hose Size	Domestic Part #	Import Part #
2	PLC200	IPLC200R
2 1/2	PLC250	IPLC250R
3	PLC300	IPLC300R
4	PLC400	IPLC400R
5	PLC500	IPLC500R
6	PLC600	IPLC600R
8	PLC800	IPLC800R
10	PLC1000	IPLC1000R
12	PLC1200	IPLC1200R

Left Hand Type Power Lock Clamps

Applications:
- Designed to be used with selected TigerFlex hoses
- Counter-Clockwise Spiral

Material:
- Carbon Steel

Hose Size	Import Part #
2	IPLC200L
2 1/2	IPLC250L
3	IPLC300L
4	IPLC400L
5	IPLC500L
6	IPLC600L
8	IPLC800L
10	IPLC1000L
12	IPLC1200L

Center Punch Clamps

Applications:
- Clamps are locked with a standard conical punch, ensuring a strong, powerful lock for reliable and consistent clamping

Material:
- Available in galvanized steel or 201 stainless steel
- Both stainless and galvanized clamps are manufactured with 201 stainless steel buckles to provide maximum locking strength

Clamp I.D.	Width (in.)	Thickness	Weight (lbs/pkg)	Quantity	Galvanized	Stainless Steel
13/16	3/8	0.025	3.6	100	CP03	CP03S
1 3/8	3/8	0.025	4.6	100	CP311	CP311S
1	5/8	0.025	8.3	100	CP04	CP04S
1 1/4	5/8	0.025	8.7	100	CP05	CP05S
1 1/2	5/8	0.025	9.7	100	CP06	CP06S
1 3/4	5/8	0.025	10.6	100	CP07	CP07S
2	5/8	0.025	11.5	100	CP08	CP08S
2 1/4	5/8	0.025	12.6	100	CP09	CP09S
2 1/2	5/8	0.025	6.8	50	CP10	CP10S
2 3/4	5/8	0.025	7.3	50	CP11	CP11S
3	5/8	0.025	7.7	50	CP12	CP12S
3 1/2	5/8	0.025	8.7	50	CP14	CP14S
4	5/8	0.025	4.9	25	CP16	CP16S
4 1/2	5/8	0.025	5.5	25	CP18	CP18S
5	5/8	0.025	5.9	25	CP20	CP20S
6	5/8	0.025	6.8	25	CP24	CP24S
7	5/8	0.025	7.4	25	CP28	CP28S
8	5/8	0.025	8.2	25	CP32	CP32S

201 Stainless Steel Banding

Applications:
- Has superior yield and tensile strength properties to provide maximum clamping strength

Width (in.)	Thickness (in.)	Weight (lbs./ft.)	Length	Part #
1/4	0.020	0.017	100	C202
3/8	0.025	0.032	100	C203
1/2	0.030	0.051	100	C204
5/8	0.030	0.064	100	C205
3/4	0.030	0.077	100	C206

Stainless Steel Buckles

Applications:
- Used with stainless stainless steel band, may be single or double wrapped

Width (in.)	Weight (each)	Quantity	Part #
3/8	0.008	100	C253
1/2	0.021	100	C254
5/8	0.024	100	C255
3/4	0.037	100	C256

Galvanized Carbon Steel Banding

Applications:
- Used in applications which do not demand high strength or corrosion protection

Width (in.)	Thickness (in.)	Weight (each)	Length	Part #
3/8	0.025	0.033	100	C303
1/2	0.030	0.051	100	C304
5/8	0.030	0.064	100	C305
3/4	0.030	0.077	100	C306

Steel Buckles

Applications:
- Used in applications which do not demand high strength or corrosion protection

Width (in.)	Weight (lbs./ft.)	Quantity	Part #
3/8	0.004	100	C353
1/2	0.010	100	C354
5/8	0.011	100	C355
3/4	0.017	100	C356

Jr. Preformed Clamps

Applications:
- Vibration resistant and required no hammering or crimping
- Automatically locks under full tension in one simple lever movement

Material:
- Available in galvanized steel or 201 stainless steel

Clamp I.D.	Width (in.)	Thickness	Weight (lbs/pkg)	Quantity	Galvanized	Stainless Steel
3/4	1/4	0.020	1.9	100	-	J240
1	1/4	0.020	2.1	100	-	J242
1 3/8	1/4	0.020	2.5	100	-	J241
1 1/2	1/4	0.020	2.6	100	-	J252
2	1/4	0.020	3.2	100	-	J253
2 3/4	1/4	0.020	3.8	100	-	J256
3	1/4	0.020	4.2	100	-	J244
3 1/2	1/4	0.020	4.6	100	-	J257
4 1/2	1/4	0.020	5.7	100	-	J259
13/16	3/8	0.025	3.6	100	J301	J201
1	3/8	0.025	3.9	100	J343	J243
1 3/8	3/8	0.025	4.7	100	J302	J202
2	3/8	0.025	5.5	100	J345	J245
3	3/8	0.025	7.5	100	J346	J246
3 1/4	3/8	0.025	8.2	100	-	J255
1	1/2	0.030	6.5	100	J303	J203
1 1/4	1/2	0.030	7.2	100	J304	J204
1 3/4	1/2	0.030	8.7	100	J336	J236
2 3/4	1/2	0.030	11.3	100	J330	J230
4	1/2	0.030	14.9	100	-	J249
1 1/2	5/8	0.030	10.4	100	J305	J205
1 3/4	5/8	0.030	11.3	100	J306	J206
2	5/8	0.030	12.2	100	J307	J207
2 1/4	5/8	0.030	13.3	100	J308	J208
2 1/2	5/8	0.030	13.9	100	J309	J209
2	3/4	0.030	14.9	100	J327	J227
2 3/4	3/4	0.030	9.2	50	J310	J210
3	3/4	0.030	9.7	50	J311	J211
3 1/2	3/4	0.030	10.8	50	J312	J212
4	3/4	0.030	6.1	25	J313	J213
4 1/2	3/4	0.030	6.7	25	J314	J214
5	3/4	0.030	7.2	25	J315	J215
6	3/4	0.030	8.2	25	J316	J216
7	3/4	0.030	10.21	25	J318	J218
8	3/4	0.030	11.00	25	J319	J219

Center Punch Tool

Applications:
- This ratchet action tensioning tool is for applying Center Punch clamps with a center punch lock

Part #
P1

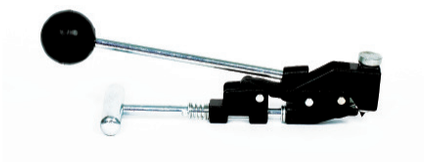

Mikalor Heavy Duty Clamps

W4 = Stainless Steel Band and Stainless Steel Bolt
W2 = Stainless Steel Band and Plated Steel Bolt

Size Open (in.)	Size Closed (in.)	Band Width	Bridge Width	All Stainless (W4)	Partial Stainless (W2)
11/16	3/4	11/16	25/32	MIK1719SS	MIK1719
3/4	13/16	11/16	25/32	MIK1921SS	MIK1921
13/16	29/32	11/16	25/32	MIK2123SS	MIK2123
29/32	1	11/16	25/32	MIK2325SS	MIK2325
1	1 1/16	11/16	25/32	MIK2527SS	MIK2527
1 1/16	1 5/32	11/16	25/32	MIK2729SS	MIK2729
1 5/32	1 7/32	25/32	7/8	MIK2931SS	MIK2931
1 7/32	1 5/16	25/32	7/8	MIK3134SS	MIK3134
1 5/16	1 7/16	25/32	7/8	MIK3437SS	MIK3437
1 7/16	1 9/16	25/32	7/8	MIK3740SS	MIK3740
1 9/16	1 11/16	25/32	7/8	MIK4043SS	MIK4043
1 11/16	1 7/8	25/32	7/8	MIK4347SS	MIK4347
1 7/8	2	25/32	7/8	MIK4751SS	MIK4751
2	2 5/32	25/32	7/8	MIK5155SS	MIK5155
2 5/32	2 5/16	25/32	7/8	MIK5559SS	MIK5559
2 5/16	2 1/2	25/32	7/8	MIK5963SS	MIK5963
2 1/2	2 11/16	25/32	7/8	MIK6368SS	MIK6368
2 11/16	2 7/8	1	1	MIK6873SS	MIK6873
2 7/8	3 1/8	1	1	MIK7379SS	MIK7379
3 1/8	3 11/32	1	3/32	MIK7985SS	MIK7985
3 11/32	3 9/16	1	3/32	MIK8591SS	MIK8591
3 9/16	3 13/16	1	3/32	MIK9197SS	MIK9197
3 13/16	4 3/32	1	3/32	MIK97104SS	MIK97104
4 3/32	4 3/8	1	3/32	MIK104112SS	MIK104112
4 3/8	4 3/4	1	3/32	MIK112121SS	MIK112121
4 3/4	5 1/8	1	3/32	MIK121130SS	MIK121130
5 1/8	5 1/2	1 7/64	1 7/32	-	MIK131139
5 1/2	5 7/8	1 7/64	1 7/32	-	MIK140148
5 7/8	6 3/8	1 7/64	1 7/32	-	MIK149161
6 3/8	6 7/8	1 7/64	1 7/32	-	MIK162174
6 7/8	7 3/8	1 7/64	1 7/32	-	MIK175187
7 3/8	7 7/8	1 7/64	1 7/32	-	MIK188200
7 7/8	8 3/8	1 7/64	1 7/32	-	MIK201213
8 3/8	8 7/8	1 7/64	1 7/32	-	MIK214226
8 7/8	9 3/8	1 7/64	1 7/32	-	MIK227239
9 3/8	9 7/8	1 7/64	1 7/32	-	MIK240252

Banding Tool

Part #
C001

Applications:
- Used to apply bands and buckles

Specifications:
- Drop forged tool with tensioning capabilities of over 2400lbs.
- Built in cutter
- Spring loaded gripper for improved band tensioning
- Spin handle retaining ring to keep parts intact

Oetiker Clamps

Size (in.)	Size Range Closed	Size Range Open	Part #
5/32	0.122	0.161	OET1563
11/64	0.138	0.177	OET1719
3/16	0.118	0.197	OET1875
1/4	0.197	0.276	OET2500
5/16	0.276	0.354	OET3125
3/8	0.315	0.433	OET3750
7/16	0.354	0.433	OET4375
1/2	0.433	0.512	OET5000
9/16	0.512	0.591	OET5625
19/32	0.591	0.669	OET5937
5/8	0.591	0.708	OET6250
3/4	0.669	0.787	OET7500
13/16	0.748	0.865	OET1922
7/8	0.787	0.905	OET8750
15/16	0.866	0.984	OET9375
1	0.905	1.063	OET10000
1 1/16	0.984	1.012	OET10625
1 1/8	1.063	1.220	OET11250
1 3/16	1.102	1.220	OET11875
1 5/16	1.220	1.339	OET13125
1 7/16	1.339	1.457	OET14375
1 1/2	1.457	1.575	OET15000
1 5/8	1.575	1.693	OET16250
1 3/4	1.693	1.811	OET17500

Applications:
- An easy to use clamp good for low pressure hose coupling

Material:
- Plated Steel

Oetiker Pincers

Type	Part Number
Straight Jaw Pincers - Model #10981	OET1098
Side Jaw Pincers - Model #10991	OET1099

Gear Clamps

Band and Housing Material:
- 1/2" stainless steel band and 5/8" housing with stainless or plated nut and bolt

Size Closed (in.)	Size Open (in.)	Carbon Steel	Stainless Steel
3/8	7/8	HS6	HAS6
7/16	1	HS8	HAS8
9/16	1 1/16	HS10	HAS10
9/16	1 1/4	HS12	HAS12
11/16	1 1/2	HS16	HAS16
3/4	1 3/4	HS20	HAS20
1 1/16	2	HS24	HAS24
1 5/16	2 1/4	HS28	HAS28
1 9/16	2 1/2	HS62	HAS62
1 13/16	2 3/4	HS36	HAS36
2 1/16	3	HS40	HAS40
2 5/16	3 1/4	HS44	HAS44
2 9/16	3 1/2	HS48	HAS48
2 13/16	3 3/4	HS52	HAS52
3 1/16	4	HS56	HAS56
3 5/16	4 1/4	HS60	HAS60
2 1/2	4 1/2	HS64	HAS64
3	5	HS72	HAS72
3 1/2	5 1/2	HS80	HAS80
3 3/4	5 3/4	HS84	HAS84
4	6	HS88	HAS88
4 1/2	6 1/2	HS96	HAS96
5	7	HS104	HAS104

Double Bolt Clamps

Material:
- Galvanized Carbon Steel

Size Open (in.)	Size Closed (in.)	Part #
21/32	7/8	I22
7/8	1 9/64	I29
1 5/16	1 11/16	I34
1 5/16	1 19/32	I40
1 5/8	1 15/16	I49
1 7/8	2 3/8	I60
2 3/8	3 1/16	I76
3 1/2	3 11/16	I94
3 3/4	4 1/2	I115
3 1/2	4	I400
4 1/16	4 7/16	I463
4 3/16	5	I525
5	5 1/2	I550
5 1/2	5 15/16	I600
6 1/8	6 7/8	I675
6 15/16	7 5/8	I769

Full Port Ball Valve

Size	Cast Brass	Stainless Steel
1/4	BVBR250FP	BVSS250FP
3/8	BVBR038FP	BVSS038FP
1/2	BVBR050FP	BVSS050FP
3/4	BVBR075FP	BVSS075FP
1	BVBR100FP	BVSS100FP
1 1/4	BVBR125FP	BVSS125FP
1 1/2	BVBR150FP	BVSS150FP
2	BVBR200FP	BVSS200FP
2 1/2	BVBR250FP	BVSS250FP
3	BVBR300FP	BVSS300FP
4	BVBR400FP	-

Standard Ball Valve

Size	Cast Brass	Stainless Steel
1/4	BVBR250	BVSS025
3/8	BVBR038	BVSS038
1/2	BVBR050	BVSS050
3/4	BVBR075	BVSS075
1	BVBR100	BVSS100
1 1/4	BVBR125	BVSS125
1 1/2	BVBR150	BVSS150
2	BVBR200	BVSS200
2 1/2	BVBR250	-
3	BVBR300	-
4	BVBR400	-

Check Valves

Applications:
- Water, air
- For horizontal, vertical and sloping installations

No.	Part	Material
1	Body	Cast Brass
2	Cap	Cast Brass
3	Disc	Cast Brass
4	Hinge Pin	Brass Rod
5	Hex Plug	Brass Rod

Standard Quick Opening Gate Valve

Size	Part #
1	QOG100
1 1/4	QOG125
1 1/2	QOG150
2	QOG200
3	QOG300
4	QOG400
5	QOG500
6	QOG600

Side Lever Quick Opening Gate Valve

Size	Part #
1	QOG100LG
1 1/4	QOG125LG
1 1/2	QOG150LG
2	QOG200LG
3	QOG300LG
4	QOG400LG
5	QOG500LG
6	QOG600LG

Ultraflo 400 Series Butterfly Valve - Black Seat / Carbon Disk

Size	Part #
2	2400001516
3	3400001516
4	4400001516
5	5400001516
6	6400001516
8	8500001516

Body: Aluminum
Seat: Black EPDM
Stem: 17-4 Stainless Steel
Disc: Ductile Iron

Ultraflo 400 Series Butterfly Valve - White Seat / S.S. Disk

Size	Part #
2	2400003501
3	3400003501
4	4400003501
5	5400003501
6	6400003501
8	8500003501

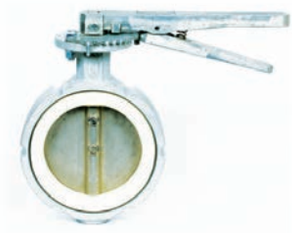

Body: Aluminum
Seat: White Nitrile - FDA
Stem: 17-4 Stainless Steel
Disc: 316 Stainless Steel

Bray 30 Series Butterfly Valve-Black Seat/Carbon Disk

Size	Part #
2	30100BV200
2 1/2	30100BV250
3	30100BV300
4	30100BV400
5	30100BV500
6	30100BV600
8	30100BV800

Body: Cast iron ASTM A126 Class B
Seat: Black EPDM Food Grade
Stem: Coated Carbon Steel
Disc: Coated Ductile Iron ASTM A536 Gr. 65-45-12

Bray 30 Series Butterfly Valve-White Seat/ S.S. Disk

Size	Part #
2	30183BV200
2 1/2	30183BV250
3	30183BV300
4	30183BV400
5	30183BV500
6	30183BV600
8	30183BV800

Body: Red Epoxy Coating
Seat: White EPDM Food Grade
Stem: 316 Stainless Steel ASTM A276 Type 316
Disc: Disc: 316 Stainless Steel ASTM A351 CF8M

Fog Water Nozzle

- Heavy duty brass valve and adjusting nut
- Hold open clip locks any spray pattern
- Chrome plated all zinc body
- Industrial strength nylon handle
- Rubber head guard on threaded GHT threads
- Hot water up to 180°F

Size	Part #
1	FN100
2	FN200

Pistol-Grip Nozzle

- Heavy duty all zinc metallized body
- Clip locks on any spry pattern
- Easy squeeze on/off lever
- All brass valve stem and adjusting nut
- Stainless steel spring with lifetime packing
- Handles GHT threads

Part #
SN75

Round Hole Strainer

Size	Part #
1 1/2	IRHS150
2	IRHS200
2 1/2	IRHS250
3	IRHS300
4	IRHS400
6	IRHS600
8	IRHS800

Square Hole Strainer

Size	Part #
1 1/2	ISHS150
2	ISHS200
2 1/2	ISHS250
3	ISHS300
4	ISHS400
6	ISHS600
8	ISHS800

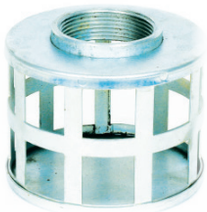

Hose Washer

- 3/4" GHT thread
- 8 GPM @ 100 PSI

Material	Part #
Red Vinyl	TVW7
White Rubber	TRW7

General Service - Dry

Designed for long and reliable service under rugged conditions. Typical applications are for pumps, hydraulic and pneumatic systems, compressors, as a contractor's gauge, and for many other applications where the measured media does not corrode brass.

Part #	Size (in.)	Case	Ring	Wetted Parts	Window	Pressure Range
11110G05P25	2 1/2	Black ABS plastic	-	Copper Alloy	Snap-in acrylic	0 - 5 PSI
11110G015P25	2 1/2	Black ABS plastic	-	Copper Alloy	Snap-in acrylic	0 - 15 PSI
11110G060P25	2 1/2	Black ABS plastic	-	Copper Alloy	Snap-in acrylic	0 - 60 PSI
11110G030P4	4	Black ABS plastic	-	Copper Alloy	Snap-in acrylic	0 - 30 PSI
23253G015P25	2 1/2	Stainless Steel	Stainless Steel	316 Stainless Steel	Polycabonate	0-15 PSI
23253G0160P25	2 1/2	Stainless Steel	Stainless Steel	316 Stainless Steel	Polycabonate	0 - 160 PSI
23254G0060P4	4	Stainless Steel	Stainless Steel	Copper Alloy	Instrument Glass	0 - 60 PSI
23254G00100P4	4	Stainless Steel	Stainless Steel	Copper Alloy	Instrument Glass	0 - 100 PSI

General Service - Liquid Filled

The ideal choice for OEM and general industrial applications requiring an economical, liquid filled pressure gauge. When vibration and/or pulsation are present, the glycerine fill liquid dampens the bourdon tube and reduces wear on the movement which extends the life of the gauge. Typical applications include air compressors, hydraulic presses, pumps, cylinders, actuators, and many other types of hydraulic and pneumatic equipment.

Part #	Size (in.)	Internals	Case	Ring	Wetted Parts	Window	Pressure Range
21353G015P25	2 1/2	Brass	Stainless Steel	Polished Stainless Steel	Copper Alloy	Polycarbonate	0 - 60 PSI
21353G030P25	2 1/2	Brass	Stainless Steel	Polished Stainless Steel	Copper Alloy	Polycarbonate	0 - 30 PSI
21353G060P25	2 1/2	Brass	Stainless Steel	Polished Stainless Steel	Copper Alloy	Polycarbonate	0 - 60 PSI
21353G0100P25	2 1/2	Brass	Stainless Steel	Polished Stainless Steel	Copper Alloy	Polycarbonate	0 - 100 PSI
21353G0160P25	2 1/2	Brass	Stainless Steel	Polished Stainless Steel	Copper Alloy	Polycarbonate	0 - 160 PSI
21353G05000P25	2 1/2	Brass	Stainless Steel	Polished Stainless Steel	Copper Alloy	Polycarbonate	0 - 5000 PSI
21353G030P4	4	Brass	Stainless Steel	Polished Stainless Steel	Copper Alloy	Polycarbonate	0 - 30 PSI
21353G0100P4	4	Brass	Stainless Steel	Polished Stainless Steel	Copper Alloy	Polycarbonate	0 - 100 PSI
23353G015P25	2 1/2	Steel	Stainless Steel	Polished Stainless Steel	316 Stainless Steel	Acrylic	0 - 15 PSI
23353G030P25	2 1/2	Steel	Stainless Steel	Polished Stainless Steel	316 Stainless Steel	Acrylic	0 - 30 PSI
23353G060P25	2 1/2	Steel	Stainless Steel	Polished Stainless Steel	316 Stainless Steel	Acrylic	0 - 60 PSI
23353G0100P25	2 1/2	Steel	Stainless Steel	Polished Stainless Steel	316 Stainless Steel	Acrylic	0 - 100 PSI
23353G0160P25	2 1/2	Steel	Stainless Steel	Polished Stainless Steel	316 Stainless Steel	Acrylic	0 - 160 PSI
23353G0200P25	2 1/2	Steel	Stainless Steel	Polished Stainless Steel	316 Stainless Steel	Acrylic	0 - 200 PSI
23353G0300P25	2 1/2	Steel	Stainless Steel	Polished Stainless Steel	316 Stainless Steel	Acrylic	0 - 300 PSI
23353G0400P25	2 1/2	Steel	Stainless Steel	Polished Stainless Steel	316 Stainless Steel	Acrylic	0 - 400 PSI
23353G0600P25	2 1/2	Steel	Stainless Steel	Polished Stainless Steel	316 Stainless Steel	Acrylic	0 - 600 PSI
23353G03000P25	2 1/2	Steel	Stainless Steel	Polished Stainless Steel	316 Stainless Steel	Acrylic	0 - 3000 PSI
23353G0300P4	4	Steel	Stainless Steel	Polished Stainless Steel	316 Stainless Steel	Acrylic	0 - 300 PSI

Hydraulic Pump

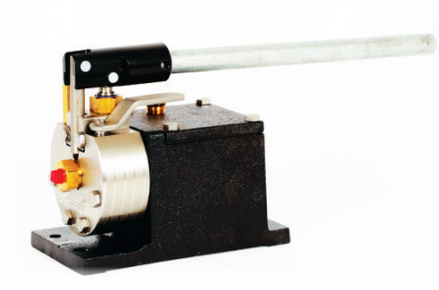

- Stainless Steel Valve Block and Internal Components
- Horizontal or Vertical Mounting
- Tamper Resistant Pressure Relief
- Front and Side Outlet Ports

The Betts Hydraulic Pump HP46982ALSL is designed as a corrosion resistant, reliable hydraulic pump for use with any Betts hydraulically operated valve or vent. The pump head and internal parts are made of corrosion resistant stainless steel. The reservoir is made of aluminum with a durable E-coating.

1/4 NPT hyraulic connections are conveniently located at both the front of the pump and on the right side. A drain plug allows the reservoir to be drained without unbolting the pump.

Pump can be mounted horizontally or vertically with outlet end down.

The pump contains a tamper resistant pressure relief set to bypass at approximately 3,000 psi.

Part #	Rated Pressure	Displacement per Stroke	Fluid Capacity* Total**	Fluid Capacity* Useable***	Dry Weight
HP46982ALSL	3000	.43 in ^3	38 in ^3 (21 oz)	25 in ^3 (14 oz)	13 lb

Hydraulic Pump Parts (3rd generation)

No.	Description	Req.	Material	Part #
1	Piston	1	303 Stainless	75233SL
2	Bushing/Wiper	1	Brass/Polyurethane	75239BR
3	Release Handle Screw	1	304 Stainless	9Q4170
4	Pressure Release Handle	1	304 Stainless	75145SL
5	Release Stem	1	304 Stainless	75236SL
6	Release Stem Seal	1	Buna-N	75254BN
7	Valve Block	1	303 Stainless	35965SL
8	0.313 Ball	3	440 Stainless	9Z8505
9	Ball Spring	2	302 Stainless	75255SL
10	Spring Retainer	1	Brass	75298BR
11	Auxiliary Outlet Plug	1	Brass	9V4925
12	0.188 Ball	1	440 Stainless	9Z8507
13	Bypass Plug	1	304 Stainless	75237SL
14	Bypass Spring	1	17-7PH Stainless	75256SL
15	Bypass Cap	1	Brass	75238BR
16	Handle	1	Galv. Steel	HP19165-01
17	Beam	1	E-Coat Steel	75240EY
18	Clevis Pin	2	Zinc Plated Steel	9Q4733
19	E-Clip	2	Coated Steel	9Q4733A
20	Link	1	303 Stainless	75234SL
21	Piston Seal	1	Buna-N	17946BN
22	Pin	1	303 Stainless	9Q4950
23	Outlet O-ring	1	Buna-N	75584BN
24	Outlet	1	Brass	75583BR
25	1/4" NPT Pipe Plug	1	Plastic	9Z6145
26	Valve Block Cap Screw	6	304 Stainless	9Q5975
27	Head Gasket	1	Cellulose Fiber	75244CF
28	Filter Screen	1	304 Stainless	75148SL
29	Drain Plug	1	Brass	9V4914
30	Reservoir	1	Aluminum E-Coat	46973ALEY
31	Priming Instructions	1	Vinyl	9Z4022
32	Cover Cap Screw	4	304 Stainless	9Q5861
33	Cover Plate	1	Aluminum E-Coat	75246ALEY
34	Cover Gasket	1	Cellulose Fiber	75245CF
35	Vent Plug	1	Brass/Viton	75242BR

* *Pumps are shipped dry with no hydraulic fluid.*

** *Total = amount of fluid to fill reservoir to within 1/4" of the cover plate (33).*

*** *Useable = amount of fluid to take 'Total' fluid down to just above the filter screen (28).*

Hydraulic Pump Parts-Obsolete
(2nd generation)

	Part #	Description
1	HP1916501	Handle
2	HP1916502	Beam
3	HP1916503	Snap Ring
4	HP1916504	Beam Pin
5	HP1916505	Link
6	HP1916506	Link Pin
7	HP1916507	Oil Seal-Piston
8	HP1916508	Piston
9	HP1916509	Gland-Piston
10	HP1916510	O-Ring-Piston
11	HP1916511	Back-up Ring-Piston
12	HP1916512	Teflon Seal
13	HP1916513	Relief Valve
14	HP1916514	Gasket-Relief Valve
15	HP1916515	Screw-Release Valve
16	HP1916516	Washer Set (Star & Flat) Release Valve
17	HP1916517	Handle-Release Valve
18	HP1916518	Oil Seal-Release Valve
19	HP1916519	Stem-Release Valve
20	HP1916520	Seat-Release Valve
21	HP1916521	Set Screw-Release Valve Seat
22	HP1916522	Gasket-Cover
23	HP1916523	Ball 1/4 Dia.
24	HP1916524	Ball 3/8 Dia.
25	HP1916525	Spring-Check Valve
26	HP1916526	Gasket-Check Valve
27	HP1916527	Plug-Check Valve
28	HP1916528	Vented Plug
29	HP1916529	O-Ring-Vented Plug
30	HP1916530	Car Screw 5/16-18 x 1 1/4
31	HP1916531	Pipe Plug 1/8 NPT
32	HP1916532	Pipe Plug 1/16 NPT
33	HP1916533	Screen
34	HP1916534	Release Valve Service Kit (18,20,22,23)
35	HP1916535	Piston Service Kit (10,11,12,22)
36	HP1916536	Complete Service Kit (3,7,10,11,12,14,18,20,22,23,24,26)
37	HP1916537	Spring-Small-Check Valve
38	HP1916538	Spacer Washer

PLEASE NOTE:
All parts may not be available due to limited supply and may be discontinued without notice.

Hydraulic Pump (Old Design) Parts (HP18951MS)
(1st generation)

	Part #	Description
1	HP18001	Handle
2	HP18002	Beam
3	HP18003	Snap Ring Clip
4	HP18004	Beam Pin
5	HP18005	Plunger Cross Pin
6a	HP18965	Piston
6b	HP18965	Piston Sleeve
6c	HP18967	O-Ring
6d	HP18968	Backup Ring
7	HP18007	Packing Nut
8	HP18008	Packing
9	HP18009	Plug
10	9Q5813	Hex Head Cap Screw
11	HP18011	Base Cover
12	HP18012	Gasket
13	HP18013	Relief Valve
14	HP18014	Gasket
15	HP18015	Screen
16	HP18016	Screw
17	HP18017	Washer
18	HP18018	Release Handle
19	HP18019	Relief Valve Assembly
20	HP18020	Packing Nut
21	HP18021	Packing
22	HP18022	NOT SERVICEABLE
23	HP18023	Ball
24	HP18024	Ball
25	HP18025	Spring
26	HP18026	Gasket
27	HP18027	Plug
28	HP18028	Plug
29	HP18029	Roll Pin
30	HP18330	Washer
	HP16422	Release Valve Kit (16,17,18,19,20,21)
	HP16256	Seal & Gasket Kit (6c,6d,8,12,14,21,26)
	HP16257	Service Kit (6a,6b,8,12,21,23,26)

Internal Chemical Hydraulic Valve

The Internal Chemical Hydraulic Valve is designed for use with a wide variety of chemicals.

It is an internal self-closing stop valve, therefore it does not require under carriage crash protection. Available elbows are supplied with shear sections to meet 49CFR 178.345-8(a)(4). A heavy mounting flange is provided to insure a flat surface for a positive seal. A replaceable Teflon seat and a replaceable stem are provided for ease in repairing a damaged valve.

The 1/8 NPT Hydraulic connection is located on the outside of the mounting flange. 1,500 psi minimum hydraulic line pressure is required to operate the valve, but do not exceed 4,000 psi hydraulic link pressure.

Description	Part #	Material*	Flange	O.D.	Bolt Circle	Bolt Holes	Temp. Range	MAWP	Weight
Internal Hydralic Valve	CH47003SST	316 Stainless	8 3/16"	7 1/4"	8 - 9/16"		-40° F to +400° F	50	31
Internal Hydralic Valve	CH47003LHT	316 SS w/ Hastelloy** trim	8 3/16"	7 1/4"	8 - 9/16"		-40° F to +400° F	50	31

NOTE: A flat mounting surface must be provided for the valve. Recommened mounting pad with extended studs is MP19741LC.

* Material listing is for all wetted surfaces exposed to product during normal operation of valve.

** Hastelloy trimmed valve is an option that includes Hastelloy C-22 overlay on the disc (5) in the area in contact with the seal (15).

The Hastelloy overlay reduces the potential of the disc pitting at the seat contact area.

Suffix "017" indicates Teflon Seat w/ Double Tef-Sil O-Ring.

CH47003SST Internal Chemical Hydraulic Valve Parts

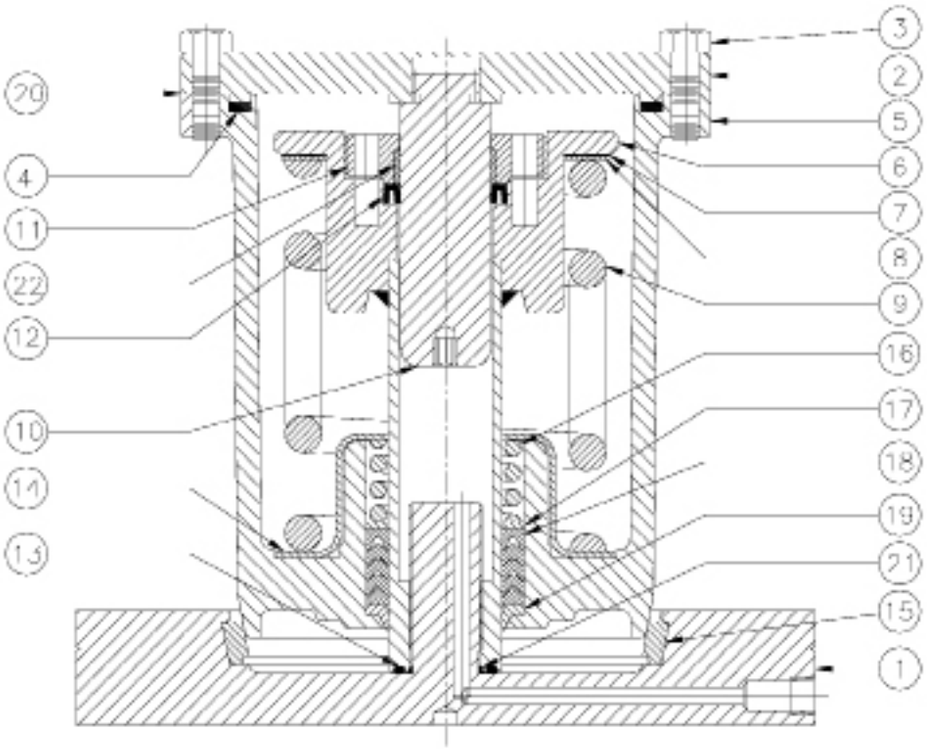

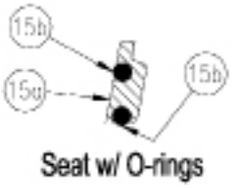

Replacement Kit of Teflon Parts
CH75358TF - includes items
4, 7, 8, 12, 13, 15, 16, 17, 18, 19, 20, 21, 22

CH75358TFTS - Includes items
4, 7, 8, 12, 13, 15a, 15b, 16, 17, 18, 19, 20, 21, 22

Conversion Kit
To convert CH45843SST to CH47003SST
CH75393SSTF - Includes items
1, 2, 4, 6, 7, 8, 10, 11, 12, 13, 15, 16, 17, 18, 19, 20, 21, 22

CH75393SSTS - Includes items
1, 2, 4, 6, 7, 8, 10, 11, 12, 13, 15a, 15b, 16, 17, 18, 19, 20, 21, 22

No.	Description	Req.	Material	Part #
1	Seat Flange	1	316 Stainless	46937SS
2	Cover Plate	1	316 Stainless	75160SS
3	Cap Screw	12	316 Stainless	9Q3305
4	Gasket - Cover Plate	1	Teflon	17295TF
5	Disc	1	316 Stainless	27996LC001
			Hast. C-22 Trim	28235LH001
6	Stem/Spring Retainer	1	316 Stainless	75224SS
7	Backup Shim Spring	1	Teflon	16867TF
8	Shim-Spring	1	304 Stainless	16866SL
9	Main Spring	1	316 Stainless	16890SS
10	Piston	1	303 Stainless	75161SL
11	Seal Retainer	1	316 Stainless	75162SS
12	Main Hydraulic Seal	1	PTFE/302SS	75207SSTF
13	O-Ring Stem	1	Tef-Sil	75206TS
14	Packing Retainer	1	316 Stainless	19446SS
15	Replaceable Seat	1	Teflon	16644TF
			Kalrez	16644KA
15a	Replaceable Seat/O-Rings	1	Teflon	18897TFTS
15b	Seat O-Ring only	2	Tef-Sil	18246TS
			Kalrez	18246KA
16	Spring-Stuffing Box	1	316 Stainless	19616SS
17	Follower Washer	1	316 Stainless	19594SS
18	Packing Rings	Set	Teflon	15759TF
19	Wiper - Stuffing Box	1	Teflon	15862TF
20	Gasket - Cover Plate	1	Teflon	19720TF
21	O-Ring - Stem Backup	1	Viton	3926VT
22	Bearing Ring	1	Teflon/Graphite	75455TF

Chemical Hydraulic Valve

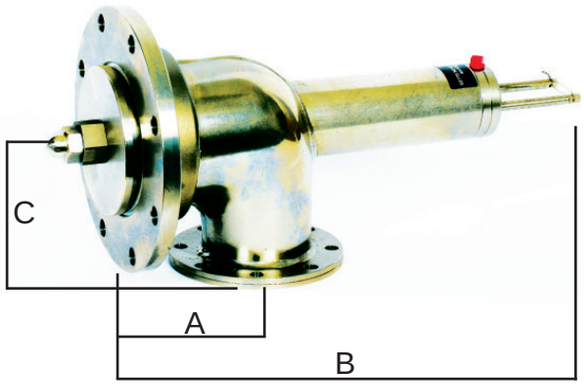

- Replaceable Teflon Seat
- Removable-Replaceable Disc
- All Seal PTFE
- 2 Piece Replaceable Stem

The Chemical Hydraulic Valve is designed for use with a variety of chamicals. A replaceable Teflon seat and removable disc are provided for ease in repairing should damage occur from dirt or other foreign material. A heavy mounting flange is provided to insure a flat sealing surface.

1/4 NPT Hydraulic connection conveniently located at the base of the piston cylinder. Indicator pins, which move in relation to the piston, show the position of the disc at all times.

This valve does NOT contain a shear section. The cargo tank must protect the valve by providing suitable protection as specified in 49 CFR 178.345-8(a)(2).

1,500 psi minimum hydraulic link pressure required to operate valve, but do not exceed 3,000 psi hydraulic link pressure.

Size	Part #	Material *	Inlet Flange (4" Sump)		Outlet (4" TTMA)		Dimensions in. [mm]			Temp. Range	MAWP	Weight
			B.C	8 Holes	B.C.	8 Holes	A	B	C			
4x3	CH46955SST	316 Stainless	7.25"	.536"	4.88"	.438"	4.75	16	4.5	-40°F to 400°F	50	29
4x3	CH46955LHT	316 SS w/ Hastelloy trim**	7.25"	.563"	4.88"	.438"	4.75	16	4.5	-40°F to 400°F	50	29
4x4	CH46946SST	316 Stainless	7.25"	.536"	5.88"	.438"	7.36	16	7.88	-40°F to 400°F	50	30.5
4x4	CH46949LHT	316 SS w/ Hastelloy trim**	7.25"	.563"	5.88"	.438"	7.36	16	7.88	-40°F to 400°F	50	30.5

NOTE: A flat mounting surface must be provided for the valve. Recommened mounting pad with extended studs is MP19752LC

* Material listing is for all wetted surfaces exposed to product during normal operation of valve.

** Hastelloy trimmed valve is an option that includes Hastelloy C-22 overlay on the disc (5) in the area in contact with the seal (15).
The Hastelloy overlay reduces the potential of the disc pitting at the seat contact area.

Suffix "017" indicates Teflon Seat w/ Double Tef-Sil O-Ring.

Chemical Hydraulic Valve Parts

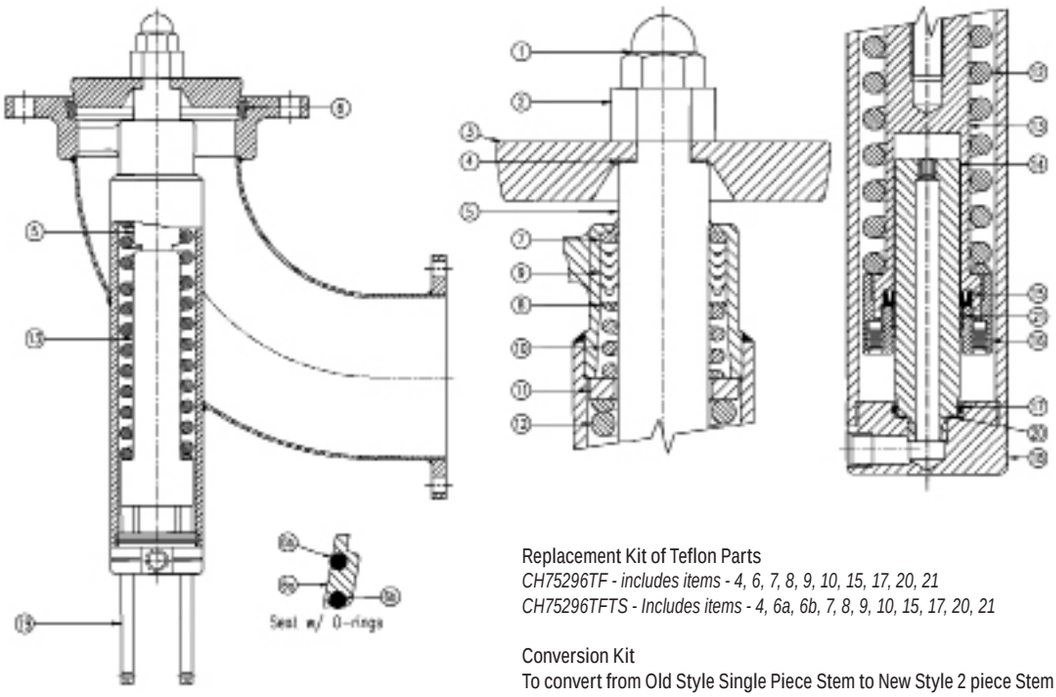

Replacement Kit of Teflon Parts
CH75296TF - includes items - 4, 6, 7, 8, 9, 10, 15, 17, 20, 21
CH75296TFTS - Includes items - 4, 6a, 6b, 7, 8, 9, 10, 15, 17, 20, 21

Conversion Kit
To convert from Old Style Single Piece Stem to New Style 2 piece Stem
CH75297TF - Includes items - 4, 5, 6, 7, 8, 9, 10, 13, 14, 15, 16, 17, 18, 20, 21
CH75393SSTS - Includes items - 4, 5, 6a, 6b, 7, 8, 9, 10, 13, 14, 15, 16, 17, 18, 20, 21

No.	Description	Req.	Material	Part #
1	Seat O-Ring	1	Tef-Sil	19033TS
3	Stem & "O" Ring Holder Assembly	1	316 Stainless	19253SS
3a	Stem & "O" Ring Holder	1	316 Stainless	19254SS
3b	Retainer Plate	1	316 Stainless	27443SS
3c	Cap Screws	4	316 Stainless	9Q4174
4	Spider	1	316 Stainless	27174SS
5	Spring Housing Cap	1	316 Stainless	19080SS
6	Spring Washer	1	316 Stainless	18480SS
7	Spring Housing	1	316 Stainless	27371SS
8	Spring	1	316 Stainless	19413SS
9	Housing Cap O-Ring	1	Tef-Sil	19115TS
10	Retainer Ring	1	302 Stainless	9Q4923
11	Washer	1	316 Stainless	19083SS
12	Base O-Ring	1	Tef-Sil	17730TS
13	Packing Set	1	Teflon	8N2833
13a	Packing Spring	1	302 Stainless	19050SL
14	Wiper	1	Teflon	18172TG
15	Bushing	1	Teflon	18467TG
16	Spider Retaining Screw	4	316 Stainless	9Q5841
17	Retainer Bolt	4	Stainless	9Q4919
18	Lockwasher	4	Stainless	9Q5844
19	Retainer Nut	4	Stainless	9Q5805
20	Barrel Cap "O" Ring	1	Tef-Sil	18858TS
21	Hyd. Actuator-4X3 Model	1	Stainless	35233SSTS
21	Hyd. Actuator-4X4 Model	1	Stainless	35224SSTS
21	Hyd. Actuator-Spec. 4X3	1	Stainless	35228SSTS

Liquid - Chemical

Quick Clean Chemical Hydrolet Valve

The Betts Quick Clean Q.R.B. Hydrolet Valve with the seamless body and exclusive quick-removable bonnet is designed for use on transport tanks hauling a variety of products, where easy dismantling for cleaning and inspection is essential. The valve is available in the two styles shown below with flanged or threaded outlets. The valve is contructed of 316 stainless for compatability with a wide range of products.

Pressure and Temperature Rating:
- Max working pressure (MAWP): 36 psi
- Max temperature (dependent on seal):
  - PTFE, FKM or Non-Asbestos: 400°F [204°C]
  - Nitrile (Buna-N): 230°F [110°C]

45° Elbow			90° Elbow	
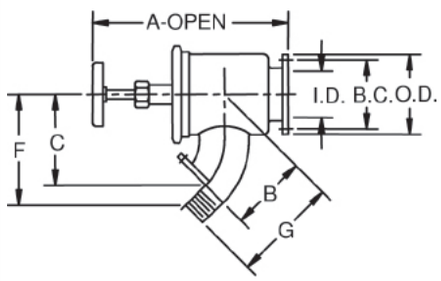			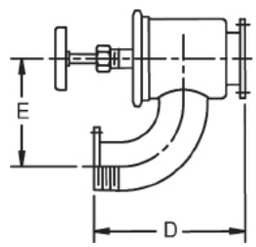	
Size	Part #	Weight	Part #	Weight
Flanged 3″	QC763SST	16	QC703SST	17.5
Threaded 3″	QC773SST	16	QC713SST	17.5

Valve Dimensions

Size	A	B	C	D	E	F	G	Flanged Inlet & Outlet I.D.	O.D.	B.C.	Holes	Thd. Outlet Pipe Size
3″	14 29/32″	5 17/32″	6 1/2″	11″	7 1/2″	7 13/16″	7 1/2″	3 3/8″	5 5/8″	4 7/8″	8 - 7/16	3″

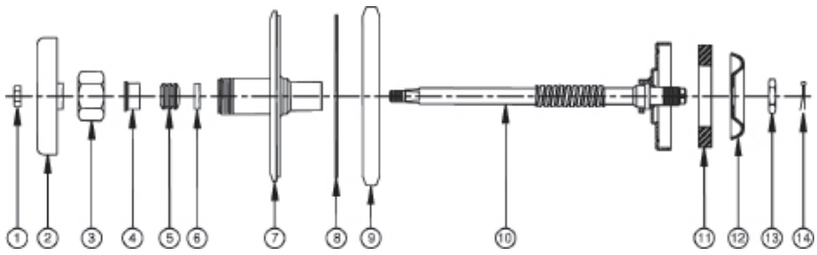

No.	Description	Req.	Material	Part #
1	7/16 - 14UNC-2A Hex Nut	1	Stnls.	9Q8580
2	Handwheel	1	Alum.	25186AL
3	Stuffing Box Nut	1	Stnls.	15026SL
4	Top Gland	1	Stnls.	15220SS
5	Teflon Packing	1	Teflon	19649TF
6	Bottom Gland	1	Stnls.	15076SS
7	Tophead & Bonnet	1	Stnls.	16126SS

No.	Description	Req.	Material	Part #
8	Top Head Gasket	1	Teflon/FKM	15977TF
9	Clamp Ring Assembly	1	Stnls.	25683SL
10	Disc Holder & Stem Assem.	1	Stnls.	17683SS
11	Disc	1	Teflon	15202TF
12	Disc Retainer Plate	1	Stnls.	17028SS
13	Disc Plate Nut	1	Stnls.	15204SS
14	1/8″x1 Cotter Pin	1	Stnls.	9Q5867

Hydrolet Valves Parts (Bolted & QRB)

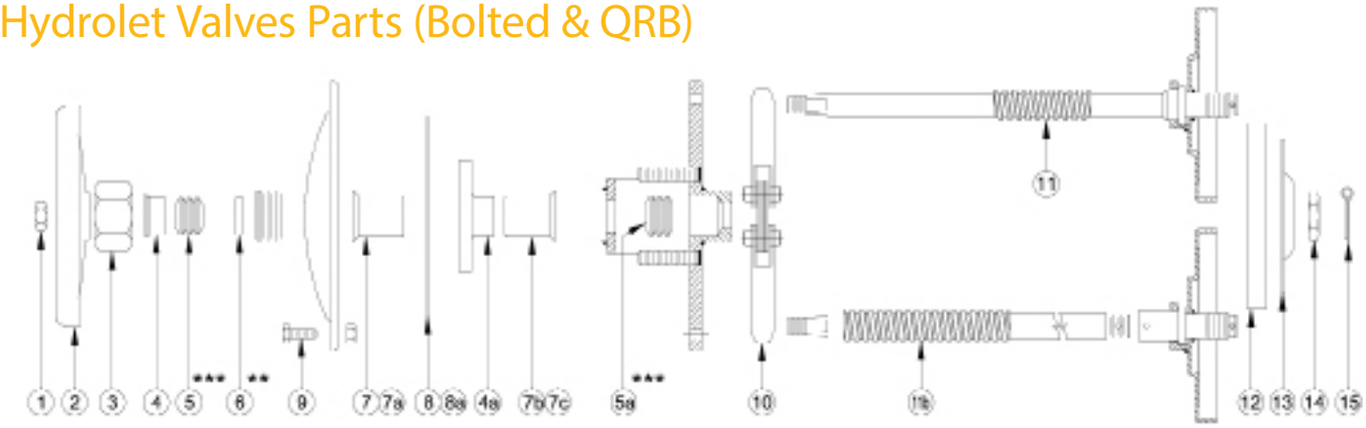

No.	Part #	Req.	Material	Description	Size
1	9Q8579	1	Steel Zinc Plt.	Hex Nut 7/16 - 14 Nut	3" - 4"
	9Q8580	1	304 Stnls		
2	25186AL	1	Aluminum	Handwheel	3"
	25245AL	1	Aluminum		4"
3	15026AL	1	Aluminum	Stuffing Box Nut	3" - 4"
	15026SL	1	304 Stnls		
4	15220SS	1	316 Stnls	Top Gland	3" - 4"
4a	16758SL	1	304 Stnls	Top Gland OS&Y Style	3" - 4"
5***	19649TF	1	Teflon	Teflon Packing	3" - 4"
5a***	19648TF	1	Teflon	Teflon Packing	3" - 4"
6**	15076SS	1	316 Stnls	Bottom Gland	3" - 4"
7	15382MS	1	Steel	Tophead & Bonnet Bolted Style	3"
	15382AL	1	Aluminum		
	25365MS	1	Steel		4"
	25365AL	1	Aluminum		
7a	15573SS	1	316 Stnls	Tophead & Bonnet QRB Style	3"
	15573AL	1	Aluminum		
	15126SS	1	316 Stnls		4"
	16126AL	1	Aluminum		
7b	26133SS	1	316 Stnls	Tophead & Bonnet QRB OS&Y	3"
	26133AL	1	Aluminum		
	26138SS	1	316 Stnls		4"
	26138AL	1	Aluminum		
7c	26145MS	1	Steel	Tophead & Bonnet Bolted OS&Y	3"
	26145AL	1	Aluminum		
	26150MS	1	Steel		4"
	26150AL	1	Aluminum		
8	15022CB	1	Cork-Buna-N	Tophead Gasket Bolted Style	3"
	15022NA	1	Non-Asbestos		
	15022TF	1	Teflon-Env.		
	15265CB	1	Cork-Buna-N		4"
	15265NA	1	Non-Asbestos		
	15265TF	1	Teflon-Env.		

**** This part not req'd. on OS&Y Models**

No.	Part #	Req.	Material	Description	Size
8a	15905CB	1	Cork-Buna-N	Tophead Gasket QRB Style	3"
	15905TF	1	Teflon-Env.		
	15977CB	1	Cork-Buna-N		4"
	15977TF	1	Teflon-Env		
9	15023ZC	Set	Steel Zinc Plt.	Bolts & Nuts (Set)	3"
	15023SL	Set	18-8 Stnls		
	16549ZC	Set	Steel Zinc Plt.		4"
	16549SL	Set	18-8 Stnls		
10	25641SL	1	304 Stnls	QRB Clamp	3"
	25683SL	1	304 Stnls		4"
11	17683AL	1	Aluminum	Disc Holder & Stem Assy.	3"
	17683MS	1	Steel	Bolted & QRB Style	
	17683SS	1	Stnls		
	17684AL	1	Aluminum		4"
	17684MS	1	Steel		
	17684SS	1	Stainless		
11a	28003MS	1	Steel	Disc Holder & Stem Assy.	3"
	28003SS	1	316 Stnls	OS&Y Style	
	20884MS	1	Steel		4"
	28004SS	1	316 Stnls		
12	15202BU	1	Buna-N	Disc	3"
	15202NA	1	Non-Asbestos		
	15202TF	1	Teflon-Env.		
	15202VT	1	Viton		
	15024BU	1	Buna-N		4"
	15024NA	1	Non-Asbestos		
	15024TF	1	Teflon-Env.		
	15024VT	1	Viton		
13	17028SS	1	316 Stnls	Disc Retaining Plate	3"
	15051MS	1	Steel		4"
	15051AL	1	Aluminum		
	15051SS	1	316 Stnls		
14	15204SS	1	316 Stnls	Disc Plate Nut	3" - 4"
15	9Q5867	1*	316 Stnls	Cotter Pin 1/8 x 1	3" - 4"

*** 2 Req'd. on OS&Y Models**

Hydrolet Sub-Assemblies

Size	Hydrolet Material	Bolted Style	Bolted OS&Y Style	QRB Style	QRB-OS&Y Style
3"	Steel	WV17593MSB	WV17607MSB		
	Aluminum	WV17593ALB	WV17607ALB	WV17609ALB	WV17611ALB
	316 Stnls			WV17609SST	WV17611SST
4"	Steel	WV17594MSB	WV17608MSB		
	Aluminum	WV17594ALB	WV17608ALB	WV17610ALB	WV17612ALB
	316 Stnls			WV17610SST	WV17612SST

***** Note:**
No. 5 used with Std. Bonnet Models only.

No. 5a used with OS&Y Models only.

NOTES: Cotter pins only provided on sub-assemblies ordered with either Teflon or Non-Asbestos disc.
Bolted sub-assemblies do not include QRB clamp (Item #10)
QRB sub-assemblies do not include Bolts & Nuts (Item #9)
Steel and Aluminum sub-assemblies are standard with Buna-N disc, Cork-Buna-N Gasket and Non-Asbestos packing (Suffix "B").
Stainless sub-assemblies are standard with Teflon disc, packing and gasket (Suffix "T").
VARIATIONS: (Suffix "A"-Bolted Style) when used would include non-asbestos disc, packing and gasket.
(Suffix "A"-QRB Style) when used would include non-asbestos disc, packing and teflon gasket.
(Suffix "V"-Bolted or QRB Style) when used would include viton disc, teflon packing and gasket.
WARNING Use only genuine Betts Industries Inc. replacement parts. Use of substitute parts can impair the proper functioning of this product.

16" PAF 406-98 Manhole

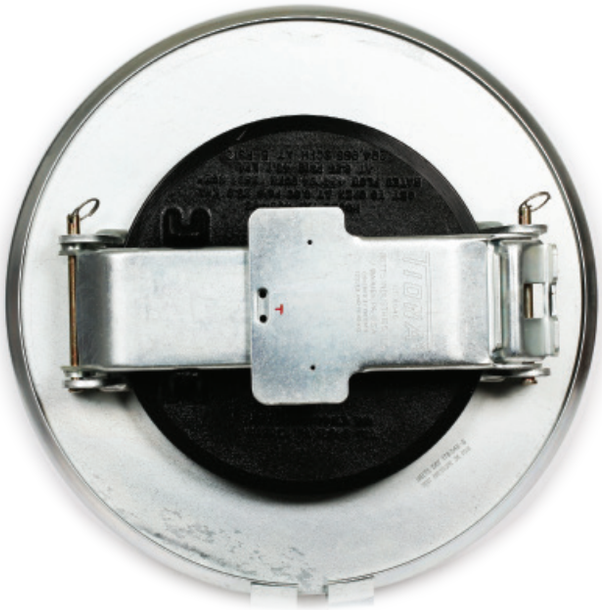

- Integral Relief Valve/10" Fill
- Less than 1 Liter Leakage
- Increased Flow Rate
- Secondary Safety Hatch

- Pressure Relief Valve setting 3.63 psig
- Rated Pressure Actuated Emergency Venting: 494,084 cu. ft. free air per hour @ 6.25 psig
- Rated Liquid Flow Capacity 1335 gpm @ 5.0 psig

PAF manholes with integral latch style surge suppression relief valves are designed for use on DOT406 and replacement on MC306 specification cargo tanks. Manholes are certified and marked in accordance with 49CFR178.345-5 with a test pressure of 36 psig. Manhole covers are 7 gage stainless and are secured to the tank weld collar with a clamp ring and bold which can be easily removed to provide access into the tank.

The integral 10" relief valve provides emergency pressure relief and meets the 1 liter surge leakage limit imposed by 49CFR178.345-10(b)(3)(ii). The relief valve also serves as a 10" latch style fill which can be easily opened to provide access for filling the tank or for inspection. Relief valves contain an adjustment feature to allow for fine-tuning of set pressure in the field. Other standard features include a heavy duty clamp ring, secondary safety latch and model 6496ALB pressure-vacuum vent mounted in the 10" relief valve cover.

Manholes are available with a self latching feature that allows the 10" relief valve/fill cover to drop and securley latch upon movement of the tank if the cover is inadvertently left open. For self-latching model substitue L742 for L716 in assembly number.

Cover Plate	Relief Valve	Clamping Ring, Bolt, Washer, Strongback & Latch	Clamping Ring Nut	Normal Vent	Weight	Part #
Steel Zinc Plt.	Alum.	Steel Zinc Plt.	Brass	Alum.	24.2	PPVL726BXB
Stnls 304	Alum.	Stnls 304	Stnls 304	Alum.	24.7	PPVL716CXB
Stnls 316	Alum.	Stnls 304	Stnls 304	Alum.	24.7	PPVL716DXB

NOTES: Manhole assemblies, as listed above, have Buna-N gaskets (suffix "B").
For variation in gasketing change the last letter of assembly number as follows.

Suffix "V" indicates Viton collar gasket & Viton 10" fill gasket

Suffix "W" indicates White Hypalon collar gasket & white Hypalon 10" fill gasket

Suffix "T" indicates Teflon envelope collar gasket & Tef-Sil 10" fill o-ring

Manhole collars are available in aluminum steel and stainless steel. Please see parts page for correct numbers.
When welding collars to tank, care should be exercised to insure collar remains flat and round.

16" PAF 406-98 Manhole Parts

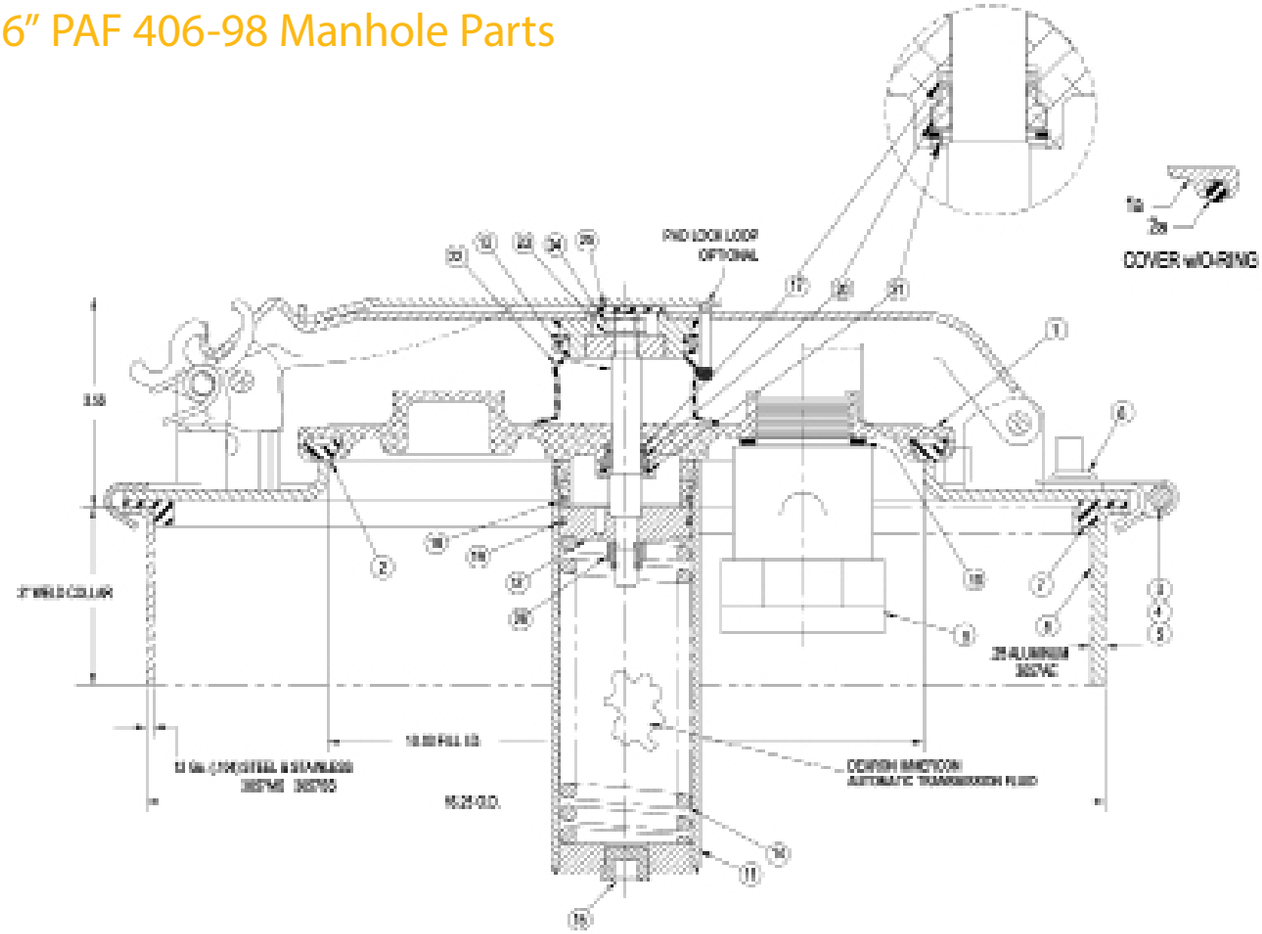

No.	Description	Material	Part #
1	Fill Cover	Alum/E-Coated	8297ALEY
1a	Fill Cover (O-Ring Grvd.)	Alum/E-Coated	8297ALEY389
2	Gasket - Integral Relief Valve	Buna-N	3119BN
		Viton	3119VT
		Wh. Hypalon	3119WH
2a	O-Ring	Tef-Sil	3902TS
3	Bolt Clamp	Steel Zinc Plt.	3029ZC
		Stnls 304	3029SL
4	Nut-Clamp Ring	Brass	3030BR
		Stnls 304	9Q5809
5	Washer-Clamp Ring	Steel Zinc Plt.	3031ZC
		Stnls 304	3031SL
6	Clamping Ring	Steel	3028MS
		Steel Zinc Plt.	3028ZC
		Stnls 304	3028SL
7	Manhole Gasket	Buna-N	3559BN
	Channel type	Viton	3559VT
		Wh. Hypalon	3559WH
		Teflon Env.	3025TF
8	Manhole Collar	Steel	3057MS
	Channel Type	Aluminum	3057AE
		Stnls 304	3057SL
		Stnls 316	3057SS

No.	Description	Material	Part #
9	Vent Assembly	Aluminum	6496ALB
10	Gasket	Buna-N	3716BN
11	Cylinder Assembly	Aluminum	6657AL
12	Piston	Aluminum	6654AL
13	Stem	Stnls 304	6688SL
14	Spring	Steel	4122MS
15	1/2" NPT Plug Zinc plt	Steel Zinc Plt.	9V4907
17	Stem O-Ring - 112	Buna-N	4118BN
18	Cylinder O-Ring - 137	Buna-N	4015BN
19	Piston O-Ring - 137	Tef-Sil	4015TS
20	O-Ring Retainer	Alum/E-Coated	4117ALEY
21	Retainer Ring	Stnls 304	9Q4961
22	Bellows	EPDM	4020EPDM
23	Lockwasher Ext. Tooth 7/16"	Stnls 304	9Q5961
24	Nut Hex 7/16x20	Stnls 304	9Q5960
25	Platic Plug	Polyethylene	9Z6163
26	3/8 - 16 Hex Nut W/ Insert	Steel Zinc Plt	9Q5896

- Gasket maximum Temperature
- Buna-N (Nitrile) 250°F
- Viton 400°F
- White Hypalon 250°F
- Teflon-Silicone 400°F
- Teflon Envelope w/ White Hypalon Insert 250°F

Replace oil in cylinder usering Automatic Transmission fluid Dexron III/Mercon, SAE 5W20 With viscosity of 177 SUS at 100°F and a pour of no greater than -45°F

MAINTENANCE: Manhose assemblies should be insoected with sufficient frequency to insure 10" Integral Relief Valve functions properly. Any worn, damaged or missing parts must be replaced. Gaskets shuld be replaced if their effectivness to insure a liquid tight seal is impaired in any way. Replacement gaskets must be compatible with products carried.

Wet-R-Dri Valve - Standard & Detent

Light Weight | Compact | Versatile

The Betts Wet-R-Dri valve is designed for handling liquid, gaseous or dry products and is available in a variety of sizes and models. This space saving valve is lightweight, easily maintained and has a positive stop in the open and closed postion. The Detent model has a detent spring and ball which assist in holding the disc in the open and closed postion.

Size (in.)	Standard Model Assembly #	Weight	Detent Model Assembly #	Weight	Body Standard	Disc Material	Max. Working Pressure	Temp. Range
2	WD200 AL B	2.4	WD201 AL B	2.4	Aluminium	Buna-N	75 PSI	-40°F to 200°F
2	WD200 GI B	4.6	WD201 GI B	4.6	Grey Iron	Buna-N	75 PSI	-40°F to 200°F
3	WD300 AL B	3.6	WD301 AL B	3.6	Aluminium	Buna-N	75 PSI	-40°F to 200°F
3	WD300 GI B	6.9	WD301 GI B	6.9	Grey Iron	Buna-N	75 PSI	-40°F to 200°F
4	WD400 AL V	4.5	WD401 AL V	4.5	Aluminium	Viton	75 PSI	0°F to 400°F
4	WD400 GI V	8.3	WD401 GI V	8.3	Grey Iron	Viton	75 PSI	0°F to 400°F
5	WD500 AL V	7.9	WD501 AL V	7.9	Aluminium	Viton	50 PSI	0°F to 400°F
6	WD600 AL U	11.8	WD601 AL U	11.8	Aluminium	Urethane	50 PSI	-40°F to 200°F
8	WD800 AL U	17.3	WD801 AL U	17.3	Aluminium	Urethane	50 PSI	-40°F to 200°F

NOTES: Standard drilling fits TTMA Recomended Standards.

Valves are available with the following options: Stainless steel liners and shafts, grease fittings installed in the drive and bearing shafts and "E" Coating of aluminum valves (recommended for aluminum valves used in water service).

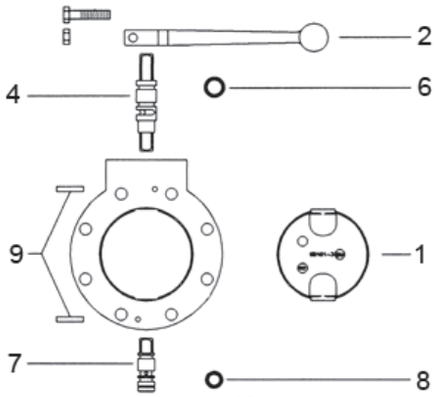

Standard Model

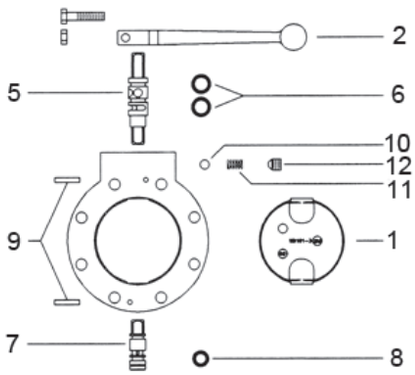

Detent Model

#	Description	Material	2" Part #	3" Part #	4" Part #	5" Part #	6" Part #	8" Part #
1	Disc	Buna-N	WD101-2 BN	WD 101-3 BN	WD 101-4 BN	WD 101-5 BN	WD 101-6 BN	WD 101-8 BN
		Viton	WD101-2 VT	WD 101-3 VT	WD 101-4 VT	WD 101-5 VT	WD 101-6 VT	WD 101-8 VT
		Urethane	WD101-2 PY	WD 101-3 PY	WD 101-4 PY	WD 101-5 PY	WD 101-6 PY	WD 101-8 PY
		EPDM	WD101-2 EP	WD 101-3 EP	WD 101-4 EP	WD 101-5 EP	WD 101-6 EP	WD 101-8 EP
2	Handle	Mall. "E" Coated	25884EY	25884EY	25884EY	25884EY	25933AL	25933AL
	Cap Screw	Steel Zinc Pit.	9Q5813	9Q5813	9Q5813	9Q5813	9Q5898	9Q5898
	Hex Nut	Steel Zinc Pit.	9Q5808	9Q5808	9Q5808	9Q5808	9Q5808	9Q5808
4	Drive Shaft	Steel	27053MS	27050MS	27050MS	27051MS	16229MS	16229MS002
5	Drive Shaft	Steel	27053MS001	27050MS001	27050MS001	27051MS001	16229MS	16229MS002
6	O-Ring	To match Disc Material	17889**	17889**	17889**	17889**	18831**	18831**
7	Bearing Shaft	Steel	16006MS	15913MS	15913MS	15913MS	16230MS	16230MS002
8	O-Ring	To match Disc Material	17781**	18141**	18141**	18141**	18831**	18831**
9	Driv-Lok-Pin	Steel Zinc Pit.	9Q4893	9Q4893	9Q4893	9Q4925	9Q4926	9Q4938
10	Detent Ball	440 Stainless	9Z4856	9Z4856	9Z4856	9Z4856	9Z4856	9Z4856
11	Detent Spring	304 Stainless	15229SL	15229SL	15229SL	15229SL	15229SL	15229SL
12	Ret. Screw	304 Stainless	9Q5838	9Q5838	9Q5838	9Q5838	9Q5838	9Q5838

** O-Ring material suffix to match Disc suffix (i.e. 17889VT)

Wet-R-Dri Valve - Metering & Locking

Locking

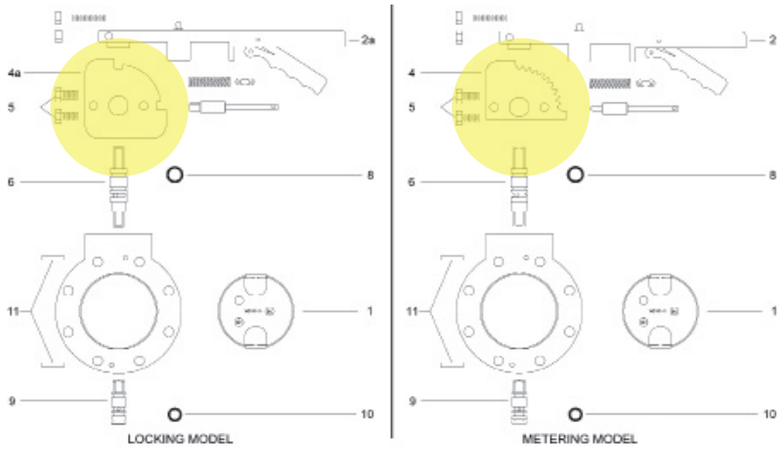

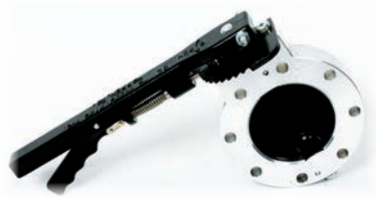

Metering

Size (in.)	Locking Model Assembly #	Weight	Metering Model Assembly #	Weight	Body Standard	Disc Material	Max. Working Pressure	Temp. Range
2	WD202 AL B	3.3	WD204 AL B	3.1	Aluminium	Buna-N	75 PSI	-40°F to 200°F
2	WD202 GI B	5.5	WD204 GI B	5.3	Grey Iron	Buna-N	75 PSI	-40°F to 200°F
3	WD302 AL B	4.5	WD304 AL B	4.3	Aluminium	Buna-N	75 PSI	-40°F to 200°F
3	WD302 GI B	7.8	WD304 GI B	7.6	Grey Iron	Buna-N	75 PSI	-40°F to 200°F
4	WD402 AL V	5.4	WD404 AL V	5.2	Aluminium	Viton	75 PSI	0°F to 400°F
4	WD402 GI V	9.2	WD404 GI V	9.0	Grey Iron	Viton	75 PSI	0°F to 400°F
5	WD502 AL V	8.8	WD504 AL V	8.6	Aluminium	Viton	50 PSI	0°F to 400°F
6	WD602 AL U	12.4	WD604 AL U	12.2	Aluminium	Urethane	50 PSI	-40°F to 200°F
8	WD802 AL U	17.9	WD804 AL U	17.7	Aluminium	Urethane	50 PSI	-40°F to 200°F

NOTES: Standard drilling fits TTMA Recomended Standards.

Valves are available with the following options: Stainless steel liners and shafts, grease fittings installed in the drive and bearing shafts and "E" Coating of aluminum valves (recommended for aluminum valves used in water service).

#	Description	Material	2" Part #	3" Part #	4" Part #	5" Part #	6" Part #	8" Part #
1	Disc	Buna-N	WD101-2 BN	WD 101-3 BN	WD 101-4 BN	WD 101-5 BN	WD 101-6 BN	WD 101-8 BN
		Viton	WD101-2 VT	WD 101-3 VT	WD 101-4 VT	WD 101-5 VT	WD 101-6 VT	WD 101-8 VT
		Urethane	WD101-2 PY	WD 101-3 PY	WD 101-4 PY	WD 101-5 PY	WD 101-6 PY	WD 101-8 PY
		EPDM	WD101-2 EP	WD 101-3 EP	WD 101-4 EP	WD 101-5 EP	WD 101-6 EP	WD 101-8 EP
2	Handle Assy.	Alum. "E" Coated	26284AL	26284AL	26284AL	26284AL	26287AL	26287AL
	Handle Assy.	Alum. "E" Coated	26075AL	26075AL	26075AL	26075AL	26077AL	26077AL
	Handle/Grip	Alum. "E" Coated	25815ALEY	25815ALEY	25815ALEY	25815ALEY	25802ALEY	25802ALEY
	Spring	302 Stnls	16365SL	16365SL	16365SL	16365SL	16365SL	16365SL
2a	Plunger-Metering	Steel	16969MS	16969MS	16969MS	16969MS	17020MS	17020MS
	Plunger-Locking	Steel	16385MS	16385MS	16385MS	16385MS	16400MS	16400MS
	Chain Link	Steel	9Z4915	9Z4915	9Z4915	9Z4915	9Z4915	9Z4915
	Cap Screw	Alum. or Steel	9Q5897	9Q5897	9Q5897	9Q5897	9Q5898	9Q5898
	Hex Nut	Steel Zinc Plt.	9Q5808	9Q5808	9Q5808	9Q5808	9Q5808	9Q5808
4	Indexing Plate	Steel "E" Coated	17012EY	17012EY	17012EY	17012EY	17016EY	17016EY
4a	Indexing Plate	Steel "E" Coated	16358EY	16358EY	16358EY	16358EY	16668EY	16668EY
5	Cap Screw	Stainless	9Q5884	9Q5884	9Q5884	9Q5884	9Q5884	9Q5884
6	Drive Shaft	Steel	27053MS	27050MS	27050MS	27051MS	16229MS	16229MS002
8	O-Ring	To Match Disc Mat.	17889**	17889**	17889**	17889**	18831**	18831**
9	Bearing Shaft	Steel	16006MS	15913MS	15913MS	15913MS	16230MS	16230MS
10	O-Ring	To Match Disc Mat.	17781**	18141**	18141**	18141**	18831**	18831**
11	Driv-Lok-Pin	Steel Zinc Plt.	9Q4893	9Q4893	9Q4893	9Q4925	9Q4926	9Q4938

** O-Ring material suffix to match Disc suffix (i.e. 17889VT)

Gate Valve (TTMA x NPT)

- Flexible action of stainless steel belleville discs insures a tighter valve over longer periods of time
- No elastomers to deteriorate
- Fabricated for greater strength, lighter weight and lower cost, in steel, stainless, and aluminum
- Double acting sytem threads double the speed of operation

MAWP 50 PSI

Part #	Pipe Size	Body	Stem	Discs	Packing	Weight (lbs)
G1003	3	Steel	Brass	Stainless Steel	3 Teflon Suspensoid Rings	9.4
AAG1003	3	Aluminum	Aluminum	Stainless Steel	3 Teflon Suspensoid Rings	4.5
G1004	4	Steel	Brass	Stainless Steel	3 Teflon Suspensoid Rings	12.5
AAG1004	4	Aluminum	Aluminum	Stainless Steel	3 Teflon Suspensoid Rings	6.3

Gate Valve (TTMA x TTMA)

- Flexible action of stainless steel belleville discs insures a tighter valve over longer periods of time
- No elastomers to deteriorate
- Fabricated for greater strength, lighter weight and lower cost, in steel, stainless, and aluminum
- Double acting sytem threads double the speed of operation. Valve closes in half the time

MAWP 50 PSI

Part #	Pipe Size	Body	Stem	Discs	Packing	Weight (lbs)
G1013	3	Steel	Brass	Stainless Steel	3 Teflon Suspensoid Rings	9.9
AAG1013	3	Aluminum	Aluminum	Stainless Steel	3 Teflon Suspensoid Rings	4.7
G1014	4	Steel	Brass	Stainless Steel	3 Teflon Suspensoid Rings	13.3
AAG1014	4	Aluminum	Aluminum	Stainless Steel	3 Teflon Suspensoid Rings	6.6

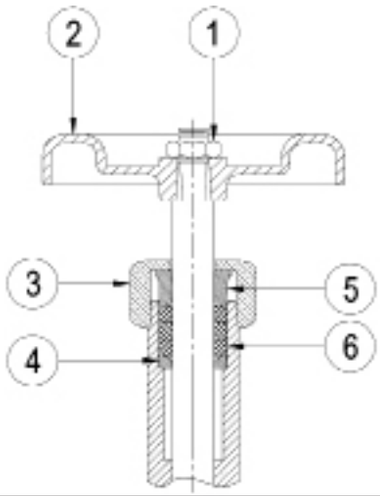

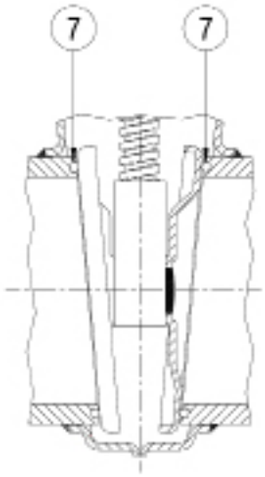

No.	Description	Req.	Material	Part #
1	7/16 - 14 Hex Nut	1	Steel	9Q5811
2	3" Handwheel	1	Alum.	25185AL
	4" Handwheel	1	Alum.	25245AL
3	Stuffing Box Nut	1	Anodized Alum.	15026AL
			Stnls.	15026SL
4	Bottom Gland	1	Stnls.	15076SS
5	Top Gland	1	Stnls.	15220SS
6	Packing Set (3 rings per set)	1	Teflon Suspensoid	15227NT
7	Set O-Ring (4" valve only)	2	Tef-Sil	19430TS

Gate Valve Handles

Size	Part #
3	25185AL

Size	Part #
4	25245AL

Sliding Gate Valve

The Betts sliding valve is an enonomical means of providing a quick opening - quick closing valve where high working pressure will not be encountered. All valves are standard with stainless steel gates which provide a bubble tight seal.

TTMA FLANGE x FLANGE

TTMA DRILLING

Size	Flanged x Flanged	Material	Wt.
3	SV903MSM	Steel	11.4
3	SV903SSM	316 Stainless	11.4
4	SV904MSM	Steel	14.9
4	SV904SSM	316 Stainless	14.9
6	SV906MSM	Steel	32.5
6	SV906SSM	316 Stainless	32.5

Size	Flanged x Threaded	Material	Wt.
3	SV913MSM	Steel	10.9
3	SV913SSM	316 Stainless	10.9
4	SV914MSM	Steel	14.1
4	SV914SSM	316 Stainless	14.1
6	SV916MSM	Steel	30
6	SV916SSM	316 Stainless	30

ANSI DRILLING

Size	Flanged x Flanged	Material	Wt.
3	SV953MSM	Steel	19
3	SV953SSM	316 Stainless	19
4	SV954MSM	Steel	24.5
4	SV954SSM	316 Stainless	24.5
6	SV956MSM	Steel	46
6	SV956SSM	316 Stainless	46

Size	Flanged x Threaded	Material	Wt.
3	SV963MSM	Steel	15
3	SV963SSM	316 Stainless	15
4	SV964MSM	Steel	20
4	SV964SSM	316 Stainless	20
6	SV966MSM	Steel	40
6	SV966SSM	316 Stainless	40

TTMA FLANGE x THREAD

TTMA Flange					
Size	O.D.	B.C.	Holes	Thick	PSI
3	6 1/8	4 7/8	8 - 7/16	0.1345	50
4	7 1/8	5 7/8	8 - 7/16	0.1345	50
6	9 3/8	8 1/8	12 - 7/16	0.1345	50

ANSI Flange					
Size	O.D.	B.C.	Holes	Thick	PSI
3	7 1/2	6	4 - 3/4	1/2	50
4	9	7 1/2	8 - 3/4	1/2	50
6	11	9 1/2	8 - 7/8	1/2	50

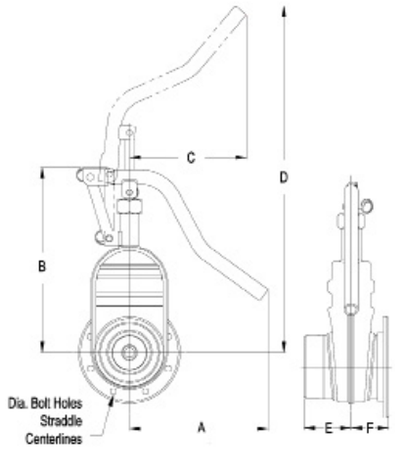

Size	A	B	C	D	E	F
3	9 1/2	11 5/8	9	19	3 3/16	2 1/4
4	10	13	9	24	3 5/16	2 5/8
6	8	17	14	26	5 1/16	4

ANSI FLANGE x THREAD

Parts

No.	Description	Req.	Material	3" & 4" Part #	6" Part #
1	Handle	1	Steel "E" Coated	35131EY	26764EY
2	Clevis Pin 1/4 x 1 1/4	1	Steel Zinc Plt.	9Q4728	9Q4728
3	Clevis Pin - Link	2	Steel "E" Coated	15757EY	15757EY
4	Cotter Pin 3/32 x 3/4	3	Brass	9Q5865	9Q5865
5	Link	1	Steel "E" Coated	17446EY	17903EY
6	Stuffing Box	1	Aluminum	15026AL	15026AL
			304 Stainless	15026SL	15026SL
7	Top Gland	1	316 Stainless	15220SS	15220SS
8	Packing	Set	Non-Asbestos/Teflon	15227NT	15227NT
9	Bottom Gland	1	316 Stainless	15076SS	15076SS

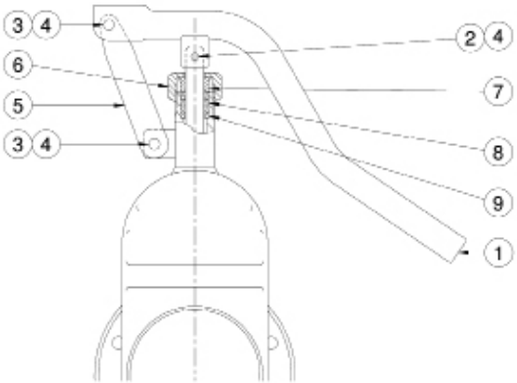

Hydraulic Vapour Valve

- Hydraulic Operated
- Hydraulic System Isolated from Product
- Quick Removable Clap Ring Tophead for Easy Cleaning
- Complies with TTMA RP 102
- 316 Stainless Steel with Teflon Seals

The Betts Stainless Steel 2" Tee Style Vapour Recovery Valve complies with recommendations of TTMA RP 102. The Unique clamp ring style tophead allows for quick removal of hydraulic actuator and internal components so valve body can be cleaned without removing body from tank. By using flexible hydraulic link to connector to actuator, hydraulic line does not need to be disconnected to remove tophead. Tee style design allows for plumbing vapour connection at top of tank and at street level for maximum flexibility. Outward Opening design provides full flow area for 2" pipe.

Design of hydraulic cylinder isolates hydraulic oil from lading. Visual syndicator confirms when valve is open. Body Constructed of 316 stainless steel with Teflon seals exposed to lading.

A	B		C	Mount	Outlets	Thru	Actuation	Temp. Range	MAWP	Weight	Part #
	Open	Closed				Area	Pressure			(lbs)	
3.19"	9.06"	7.71"	7.0"	3" NPT	2" NPT	3.14in^2	250psi	-40°F to 400°F	50 psi	12.8	CH46819SSTS

* 3000 psi maximum hydraulic pressure. Use Betts pump with 3000 psi bypass setting

**Remove from cargo tank during pressure test per 49CFR178.345-13(b) and 49CFR180.407(g)(1)(vii) if cargo tank test pressure exceeds 50 psi.

Hydraulic Vapour Valve Parts

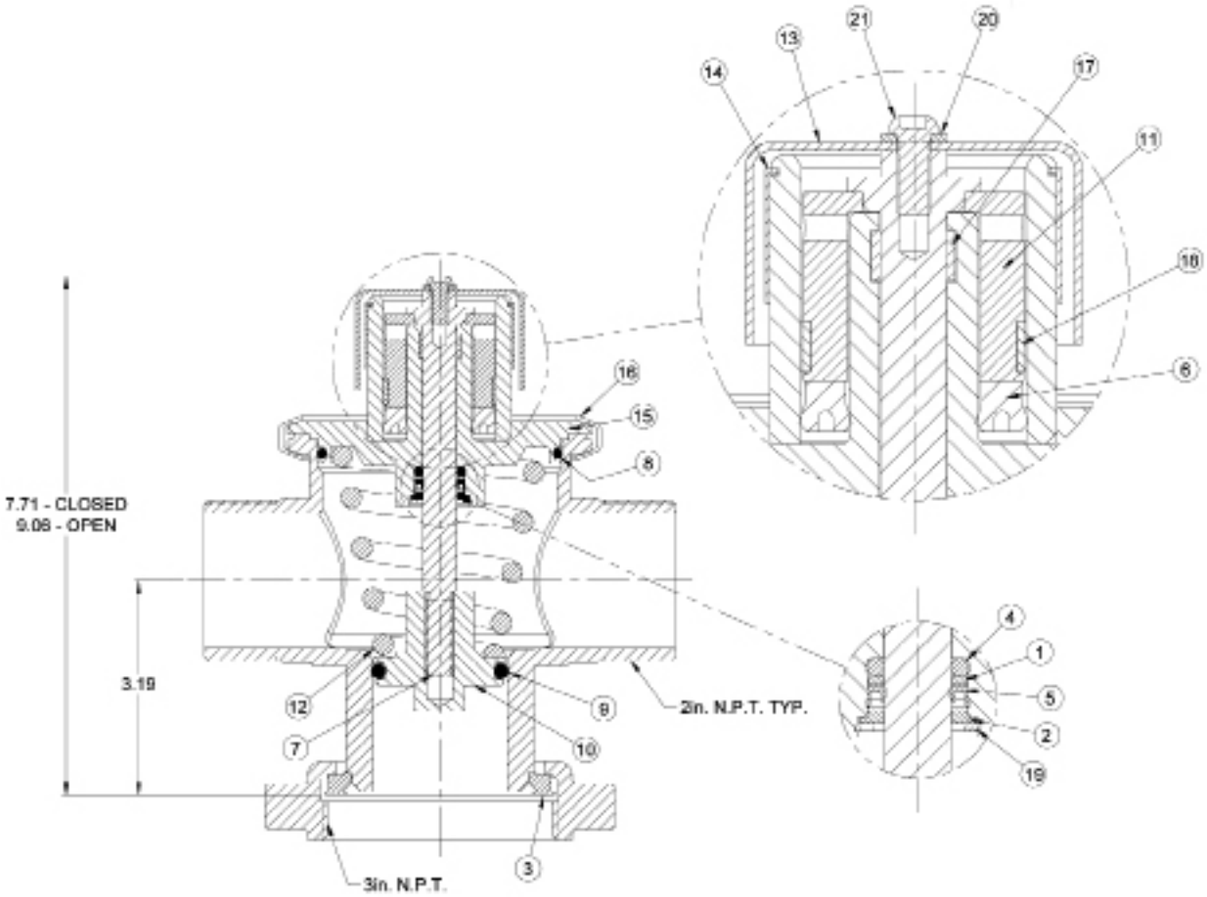

No.	Part #	Req.	Material	Description
1	19393SS	1	316 SS	Seal Retainer
2	19395SS	1	316 SS	Seal Retainer
3	19397TF	1	Teflon	Mounting Seal
4	19509TS	1	Tef-Sil	O-Ring - Stem
5	19510SSTF	1	316 SS/Tef	U-Cup Seal - Stem
6	19838PM	1	Polyester	Hydraulic U-Cup Seal
7	19840SS	1	316 SS	Stem
8	19843TS	1	Tef-Sil	O-Ring - Tophead
9	19844TS	1	Tef-Sil	O-Ring - Seat
10	19873SS	1	316 SS	O-Ring Holder
11	19882SS	1	316 SS	Hydraulic Piston
12	19884SS	1	316 SS	Main Spring
13	19893SL	1	304 SS	Rain Cap
14	19894PE	1	Polyethylene	Indicator
15	27921SS	1	316 SS	Hydraulic Top Head & Cylinder Assembly
16	28114SL	1	304 SS	Clamp Ring Assembly
17	8N9426	1	Polyester/PTFE	Stem Bushing
18	8N9427	1	Polyester/PTFE	Piston Bushing
19	9Q4943	1	15-7 Mo SS	Int. Ret. Ring (7/8)
20	9Q5844	1	304 SS	Lock Washer 1/4" SS
21	9Q5952	1	18-8 SS	1/4 -28UNF x .50 Button Head Cap Screw

WARNING: Use only Betts Industries Inc. replacement parts. Use of substitue parts can impair the proper function of this product.

Hydraulic Distributor

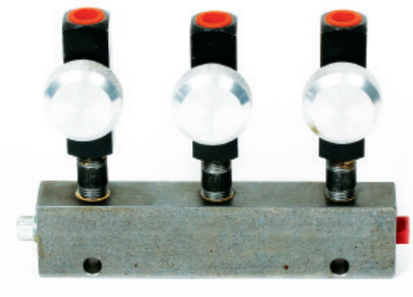

The hydraulic distributor consists of a multiple compartment manifold with individual control valves for each compartment. The special control valves limit flow to designated compartments yet allows free for flow of fluid back to manifold block even if control valve is closed. This ensures all emergency valves will close if fusible or frangible remote control is tripped.

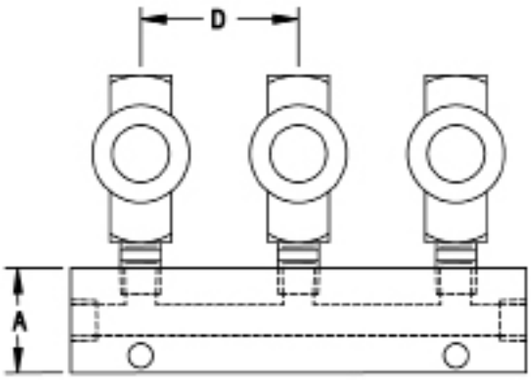

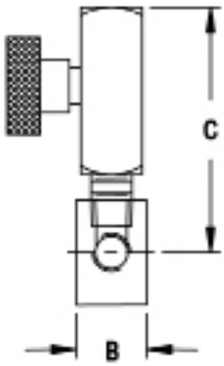

Description	WT.	Part #
2 Compartment	1.8	CH16283-2MS
3 Compartment	2.7	CH16283-3MS
4 Compartment	3.6	CH16283-4MS
5 Compartment	4.5	CH16283-5MS
6 Compartment	5.4	CH16283-6MS

Dimensions

A	B	C	D
1.5″	1″	4″	2.25″

Fusible & Frangible Plug

Breaking of frangible device or thawing of plug dumps air and closes all emergency valves and air operated vents.

Part #
FP15017BR

Fusible Plug

Thawing of a plug dumps air and closes all emergency valves and air operated vents.

Part #
FP15003BR

Air Cylinder Parts

Part #
AC35005ALB

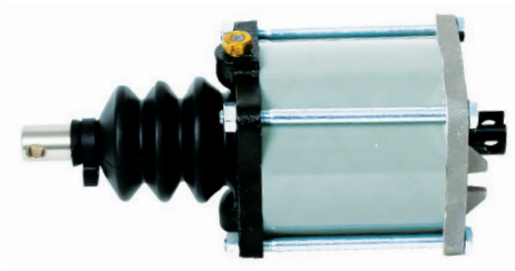

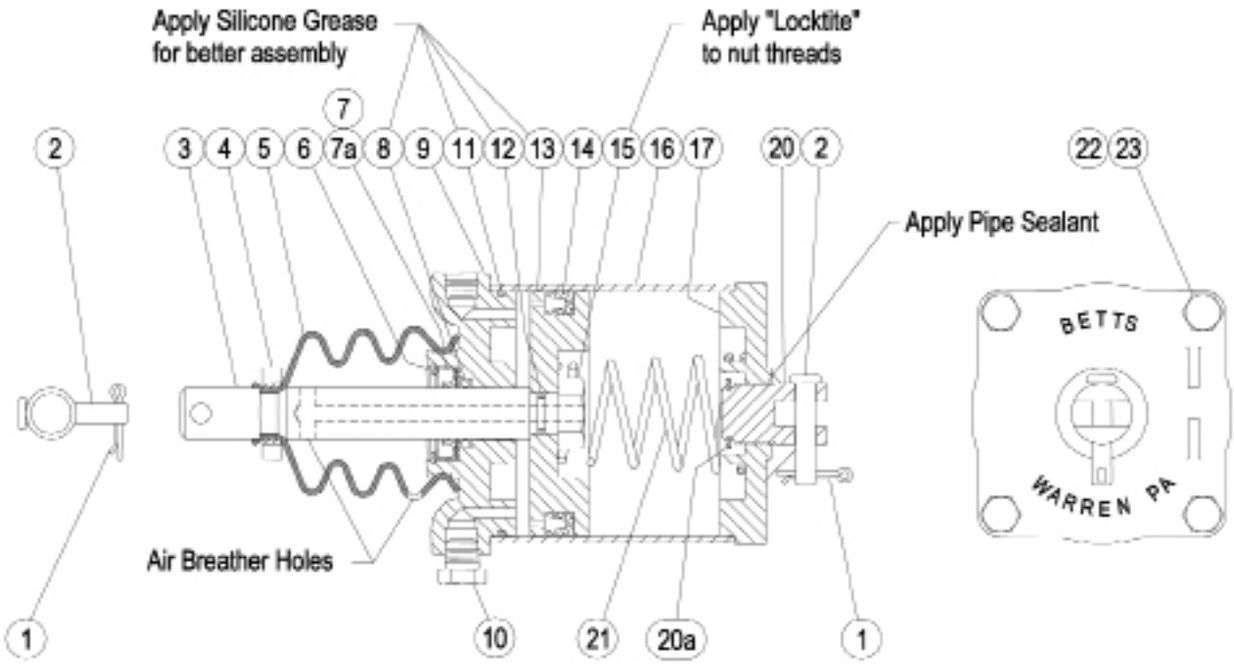

No.	Part #	Req.	Material	Description
1	9Q5865	2	Brass	Cotter Pin 3/32 x 3/4"
2	9Q4728	2	Steel - Zinc Plt.	Clevis Pin
3	177661SL	1	304 Stainless	Shaft
4	17952DL	1	Derlin	Boot Retainer
5	17777NE	1	Neoprene	Boot
6	9Q4967	1	Steel - Zinc Plt	Retaining Ring
7	19085PA	1	Steel - Phospate coated	Wiper Seal
7a	19057TF	1	Teflon	Spacer
8	18066BN	1	Buna-N	O-Ring Shaft Seal
9	17880AL	1	Aluminum	End Plate
10	FP15003BR	1	Brass	Fusible Plug
11	17666BN	1	Buna-N	O-Ring - End Plate
12	17781BN	1	Buna-N	O-Ring - Shaft
13	17660AL	1	Aluminum	Piston
14	17669BN	1	Buna-N (special low temp.)	Piston Seal
15	9Q5910	1	Steel - Zinc Plt.	Hex Half Nut 1/2-20 Thd.
16	17659AL	1	Aluminum	Cylinder
17	17881AL	1	Aluminum	Mounting End Plate
20	19060EY	1	Steel - Black Epoxy Coated	Clevis
20a	9Q4970	1	316 Stainless	Clevis Retaining Ring
21	18742EY	1	Steel - Black Epoxy Coated	Spring
22	9Q5807	4	Steel - Zinc Plt.	Locknut 1/4-28 Thd.
23	9Q2170	4	Steel - Zinc Plt.	Bolt 1/4-28 x 4

Liquid - Petroleum

Vapour Valves

- Bulb designed for maximum vapour flow (low resistance) for fast loading of tankers
- With angled acrylic sight glasses (2) and drain plug, allows viewing and drainage of fluids
- Quality cast aluminum construction
- 4" TTMA flange
- With air interlock mount (use air interlock 5000AIV if required)

Part #	Description
VR4000	4"

Economy model

- Features easy seal replacement while on tanker
- Heavy duty cast aluminum body
- 4" female NPT
- With air interlock mount (use air interlock 5000AI if required)
- Available as special order without poppet (VR41001NP)

Part #	Description
VR4100	4"

4" Vapour Caps

- Centered T handle for one handed ease of use and a solid locking mechanism
- Strong and lightweight
- Built-in locking feature
- Corrosion resistant materials
- Color coded safety orange for vapour service
- Manufactured with a hole for a chain/lanyard

Nylon

Part #	Description
VR4050PL	ultra lightweight nylon cap
VR4050PLC	ultra lightweight nylon cap with chain
VR4050PLRK1	replacement gasket for VR4050PL

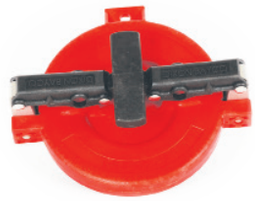

Aluminum

Part #	Description
VR4050AL	aluminum cap
VR4050ALC	aluminum cap with chain
400-G-BU	replacement gasket for VR4050AL

Dry Bulk

Air Pressure Relief Valves

- Aluminum cowl with Bayloy body eliminates thread galling
- Bronze poppet valve
- Silicone diaphragm
- Cup seal installed to deter unauthorized tampering

Part #	Description
2180RV15	2" 15 PSI
2180RV18	2" 18 PSI

Part #	Description
3180RV15	3" 15 PSI
3180RV18	3" 18 PSI

Vacuum Relief Valves

- Bayloy body and cover eliminate galling of threaded connections
- Male NPT inlet and female NPT outlet
- Bronze poppet valve
- Bolt seal installed to deter unauthorized tampering

Part #	Description
2120VR13	2" Vacuum Relief Valve Set @ 13 Hg
2120VR14	2" Vacuum Relief Valve Set @ 13 Hg
2120VR15	2" Vacuum Relief Valve Set @ 13 Hg
3120VR13	3" Vacuum Relief Valve Set @ 13 Hg
3120VR14	3" Vacuum Relief Valve Set @ 13 Hg
3120VR15	3" Vacuum Relief Valve Set @ 13 Hg

Dry Bulk

3" & 4" Swing Check Valves

Swing check valves are designed specifically for service with pneumatic equipment which transfers dry bulk commodities. Check valves allow one way directional flow only. They are used as a protective safety device to prevent flow reversal should back pressure occur.

- High air flow body design
- Large maintenance/inspection lid
- Captive drop-in spring loaded food grade flapper assembly prevents contamination
- Heavy duty cast aluminum body with stainless steel hardware

Part #	Description	Length (in.)
3030RD	3" round flange, white EPDM spring loaded flapper	6 7/8
3030SQ	3" square flange, white EPDM spring loaded flapper	6 7/8
4040RD	4" round flange, white EPDM spring loaded flapper	9

Swing Check Valve Parts

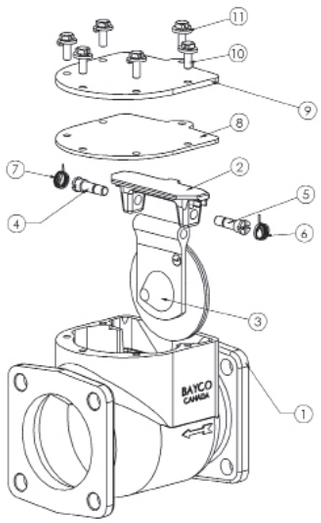

3030RD

	Part #	Description
1	-	Swing Check Body
2	341595	Flapper Valve Yoke
3A	3030RK1	Valve Flapper Assembly White EPDM
3B	3090RK3	Valve Flapper Assembly Red Silicone
3C	3091RK2	Valve Flapper Assembly Metal Seal
4	390798	Right Hand Shaft
5	390799	Left Hand Shaft
6	3030RK3	Left Hand Spring
7	3030RK3	Right Hand Spring
8A	111932	Cover Gasket, White EPDM
8B	112244	Cover Gasket, Red Silicone
9	341611	Cover
10	3030HK	Bolt
11	3030HK	Lock Washer

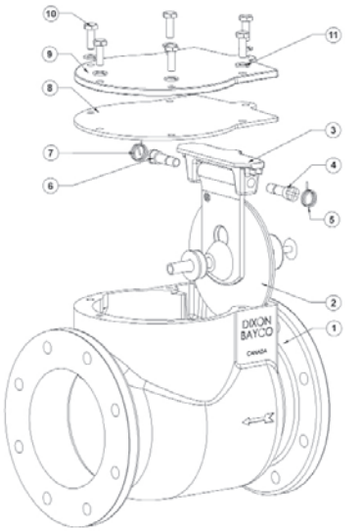

4040RD

	Part #	Description
1	-	Swing Check Body
2A	4040RK1	Valve Flapper Assembly White EPDM
2B	4041RK2	Valve Flapper Assembly Metal Seal
2C	4042RK2	Valve Flapper Assembly Red Silicone
3	341595	Flapper Valve Yoke
4A	390799	Left Hand Shaft
4B	390846	Left Hand Shaft
5A	3030RK3	Left Hand Spring
5B	4041RK3	Left Hand Spring
6A	390798	Right Hand Shaft
6B	390847	Right Hand Shaft
7A	3030RK3	Right Hand Spring
7B	4041RK3	Right Hand Spring
8	111215	Cover Gasket
9	340039	Cover
10	3030HK	Bolt
11	3030HK	Lock Washer

Drop Elbows - Heavy Duty Fuel Delivery

- The 6500 series automatically locks the arm onto the fill adapter when the arm is rotated into the locking position.
- Ergonomic arm design contains a lock release lever that the operator can engage or disengage by simply gripping the locking arm. Since the locking mechanism is tucked inside the locking arm it can not be accidentally released.
- Self-locking arm prevents the elbow from popping off due to a hydraulic surge when the underground storage tank overfill valve slams shut.
- Easy to service - all gaskets and repair parts are common to the product line.
- Handle can be mounted to left or right side of elbow.

Standard Handle

Part #	Description
6200D	4" Tight fill side lever elbow with 4" female inlet
6200T14	4" Tight fill side lever elbow with 4" female inlet and anti-spill sleeve
6200X14	4" Tall Tight fill side lever elbow with 4" female inlet
6200XT14	4" Tall Tight fill side lever tall elbow with 4" female inlet and anti-spill

T = Anti-spill Sleeve
X = Tall Height
XT = Tall Height with Anti-spill Sleeve

Locking Handle

Part #	Description
650014	4" Tight fill side lever elbow with 4" female inlet
6500T14	4" Tight fill side lever elbow with 4" female inlet and anti-spill sleeve
6500X14	4" Tall Tight fill side lever elbow with 4" female inlet
6500XT14	4" Tall Tight fill side lever tall elbow with 4" female inlet and anti-spill

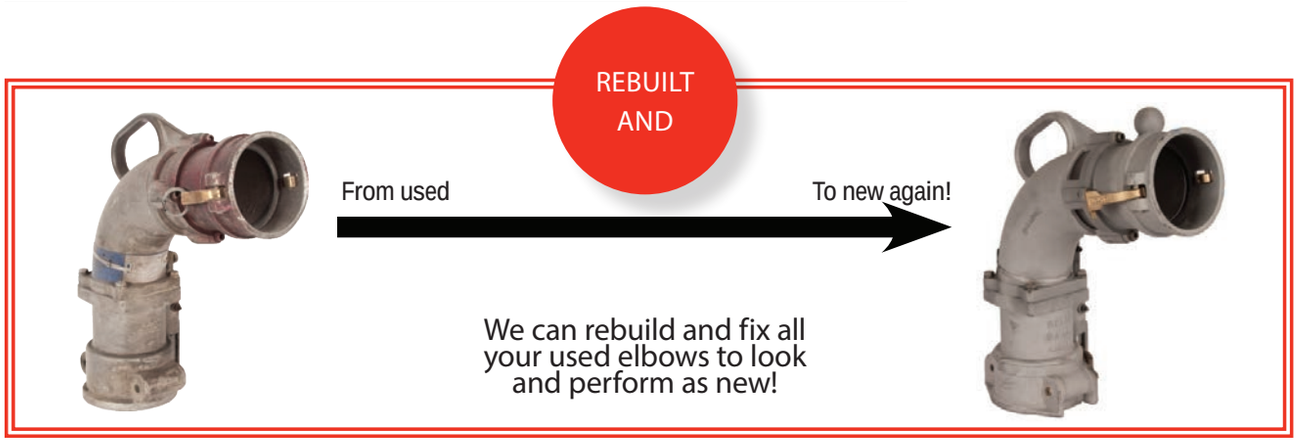

Co-Axial Elbow - Single Point Fuel Delivery and Vapour

- For single point vapour recovery only
- 3" male vapour outlet (top)
- Comes assembled with choice of 3" or 4" male or female inlets

Part #	Description
6400	4" Male inlet
6400F	4" Female inlet
6400L	4" Male inlet & safety latch
6400FL	4" Female inlet & safety latch
6430	3" Male inlet
6430F	3" Female inlet
6430FL	3" Female inlet & safety latch

Note:
- Inlets made special for co-axials only
- Quality cast aluminum construction with solid bronze arms
- Bolt-on inlets/outlets for easy, fast replacement
- Acrylic sight glass with buna seals

Elbow Parts Top Side Lever Elbow - Fits 6500 Elbow Only

Item #	Description	Part #	QTY
1	body	341709	1
2	mounting plate	use kit 6500AHK	1
3	lower lever pin	111728	1
4	upper lever pin	111727	1
5	plate screw	111732	3
6	washer	111569	3
7	handle	use kit 6500-RK1	1
8	linkage	use kit 6500-RK1	1
9A	Baylast™ gasket	4433	2
9B	Viton® gasket (optional)	4426	2
10	sight glass	use kit 6200SGK	1
11	locking latch	use kit 6500-RK1	1
12	lock nut	111730	1
13	bushing	390841	1
14	screw	111729	1
15	bolt	use kit 6000EHK	4
16	lock washer	use kit 6000EHK	4

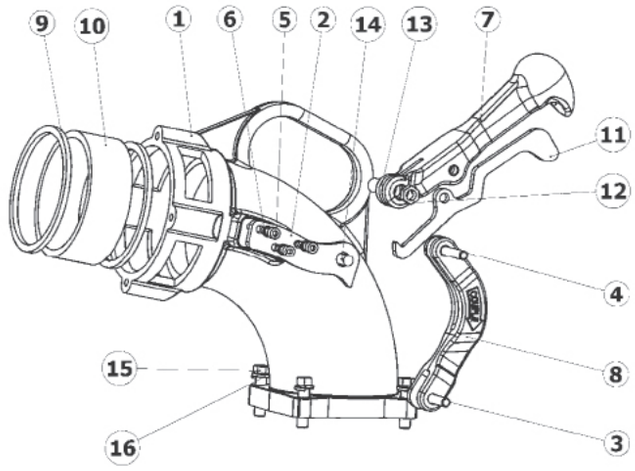

Repair Kits

Part #	Description	Includes Item
6200SGK	replacement sight glass and Baylast™ seals	9A, 10
6000EHK	replacement bolts and washers	15, 16
6500-RK1	replacement handle, linkage, lock latch, nut, bushing, pins	2, 3, 4, 5, 6, 7, 8, 11, 12, 13, 14
6500AHK	replacement mounting plate, screws and lock washers	2, 5, 6, 14
6500SHK	replacement pivot stud, bushing, washer and lock nut	5, 6, 7, 8, 11, 12, 13, 14

Bottom Unit for Side Lever Elbows -

Fits 6200, 6400 and 6500 Standard and Tall Elbows

Item #	Description	Part #	QTY
1	body	use kit 6230	1
2	small bushing	use kit 6200BK	2
3	large bushing	use kit 6200BK	2
4A	handle stem (standard)	6200-7	1
4B	handle stem (tall)	6200-7X	1
5	main gasket	6000-9	1
6	spring	112012	1
7	O-ring	AS156	1
8	grease nipple	NIPPLE/1	1
9	right arm	use kit 6200ARK	1
10	left arm	use kit 6200ARK	1
11	pin	PIN5/16X 1 1/4-P	1

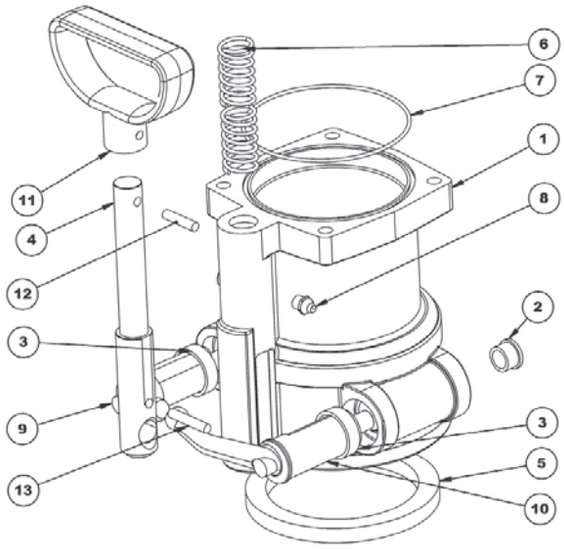

Repair Kits

Part #	Description	Includes Item
6230	complete standard replacement bottom unit	all
6230X	complete tall replacement bottom unit	all
6200ARK	replacement L and R arms, main gasket, O-rings, small and large bushings	2, 3, 5, 7, 9, 10
6200BK	replacement small and large bushings	2, 3

Co-Axial Elbow Parts

Item #	Description	Part #	QTY
1	bottom body	use kit 6230 or 6230X	1
2	right arm	use kit 6400ARK	1
3	large bushing	use kit 6200BK	2
4	small bushing	use kit 6200BK	2
5	tube U cup seal	U-CUP-2/75	1
6	tube	use kit 6400DTK	1
7	lever stem (standard)	6200-7	1
7A	lever stem (tall)	6200-7X	1
8	left arm	use kit 6400ARK	1
9	main gasket	6000-9	1
10	grease nipple	NIPPLE/1	1
11	stem spring	112012	1
12	O-ring	AS156	1
13	tube O-ring	O-RING#39	2
14	stem pin	PIN5/16X 1 1/4-P	1
15	set screw	SC3/8NCX1/2	1
16	lock washer	use kit 6000EHK	4
17	bolt	use kit 6000EHK	4
18	linkage	use kit 6200-15ASSM	1
19	pivot stud	use kit 6200SHK	1
20	pivot bushing	use kit 6200SHK	1
21	washer	use kit 6200SHK	2
22	pivot lock nut	use kit 6200SHK	1
23	handle pin	PIN5/16X 1 1/4-P	1
24	handle	use kit 6200-15ASSM	1
25	top co-axial elbow body	6400-1	1
26	3" vapour adapter outlet	6400-4	1
27	vapour adapter bolt	4432	4
30A	4" adapter fuel inlet (6400)	use kit 6000-17C	1
30B	4" coupler fuel inlet (6400F)	use kit 6000-14C	1
30C	3" adapter fuel inlet (6430)	use kit 6000-16C	1
30D	3" coupler fuel inlet 96430F)	use kit 6000-15C	1
31A	inlet bolt	SC5/16-18X2.5P	4
31B	inlet bolt lock washer	111723	4
32	inlet O-ring	AS156	2
33	sight glass	use kit 6400SGK	1
34	inlet bolt spacer	6544CA-1	4
35	vapour adapter O-ring	110601	1

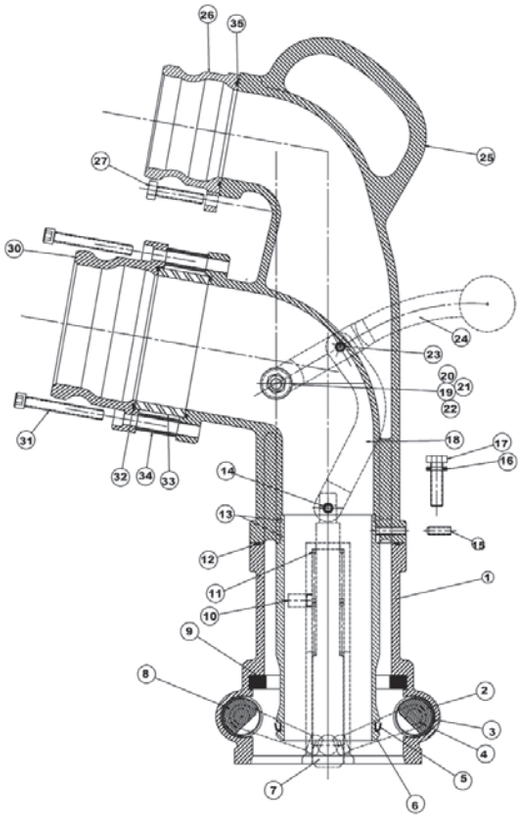

Repair Kits

Part #	Description	Includes Item
6230	complete standard replacement bottom unit	1, 2, 3, 4, 7, 8, 9, 10, 11, 12, 14
6230X	complete tall replacement bottom unit	1, 2, 3, 4, 7, 8, 9, 10, 11, 12, 14
6400ARK	replacement L and R arms, main gasket, O-rings, small and large bushings	2, 3, 4, 5, 8, 9, 12, 13
6200BK	replacement small and large bushings	3, 4
6400SGK	replacement sight glass and seal	32, 33
6200-15ASSM	replacement handle, lever and pin	18, 23, 24
6000EHK	replacement bolts and washers	16, 17
6400DTK	replacement tube, O-ring & U cup seal	5, 6, 13
6200SH	replacement pivot stud, bushing, washer and lock nut	19, 20, 21, 22

Vapour Elbows

Part #	Description
VR6200	VR6200 elbow with 3" adapter outlet, outlet poppet valve
VR6500	VR6500 elbow with 3" adapter outlet, includes outlet poppet valve
VR6500NP	VR6500 elbow with 3" adapter outlet, without outlet poppet valve

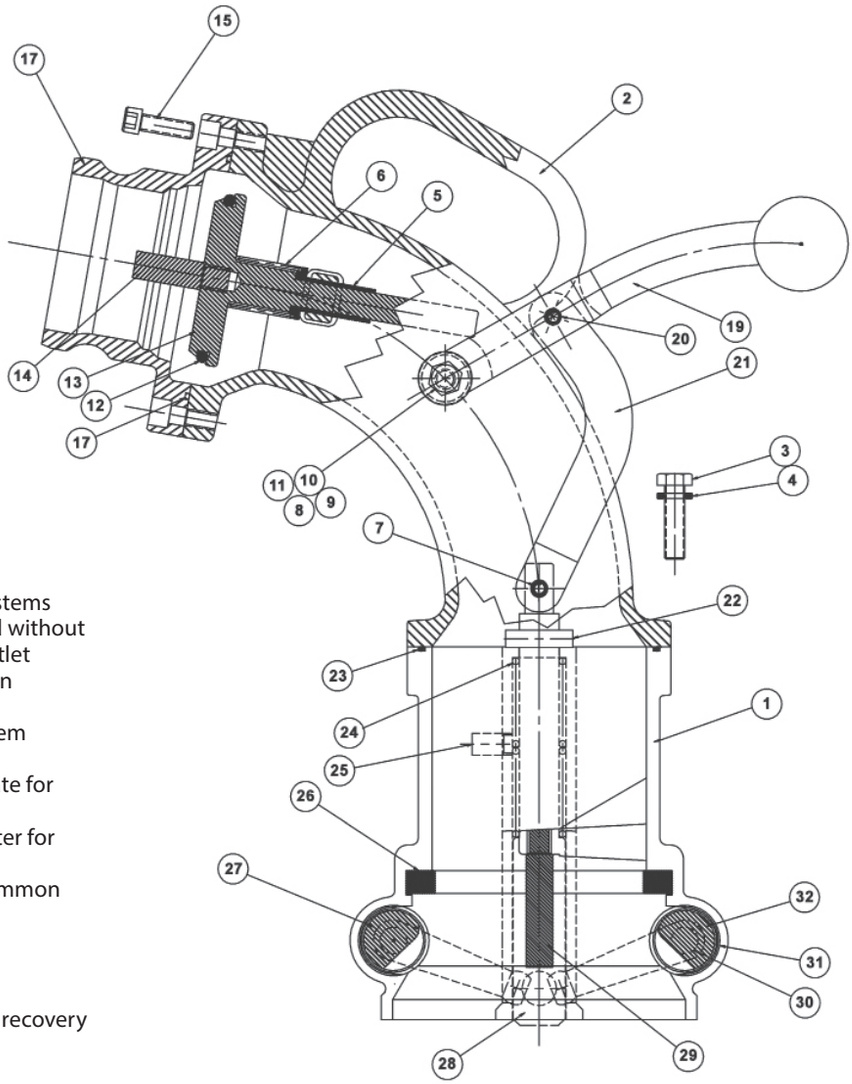

- For use in two point vapour recovery systems
- Choice of 4 models with probe, with and without poppet, and with or without adapter outlet
- One piece bronze locking arms housed in polymer bushings
- Advanced design side lever locking system
- Buna seals and stainless steel hardware
- Bolt on 3" male outlet included (can rotate for extended life)
- Use VR6000-6 as a replacement 3" adapter for VR6200 and VR6500 model
- VR6200, VR6000, and VR6500 share a common bottom end with other vapour elbows
- Lublication fitting on locking stem

Note:
See 6400 drop elbow for single point vapour recovery coaxial elbow.

6200 Repair Kits

Part #	Description	Includes Item
VR6230	complete replacement bottom unit	1, 22, 23, 24, 25, 26, 27, 28, 29, 30, 31, 32
6200BK	replacement small (2) and large (2) bushing kit	30, 31
6000EHK	replacement body lock washers and bolts	3, 4
6200SHK	replacement pivot stud, bushing, washers & lock nut	8, 9, 10, 11
6000NPHK	adapter kit bolts (4) and lock washers	15, 18
6200-15ASSM	replacement handle, linkage and pin	19, 20, 21

VR6500 Series Vapour Elbow Parts

Item #	Description	Part #	QTY
1	complete bottom body	VR6230	1
2	handle assembly	use kit VR6500RK1	1
3	body bolt	use kit 6000EHK	4
4	body lock washer	use kit 6000EHK	4
5	elbow body	-	1
6	poppet valve	VR6000-4	1
7	poppet valve stand off	VR6000-5	1
8	poppet bushing	VR6000-3	1
9	Viton® O-ring	O-RING-AS-334	1
10	poppet spring	L1110-L2287	1
11	outlet adapter & O-ring	VR6000-6	1
12	outlet O-ring	110319	1
13	outlet adapter bolt	use kit 6000NPHK	4
14	outlet lock washer	use kit 6000NPHK	4
15	lower lever pin	111728	1
16	side plate lock washer	111569	3
17	side plate bolt	111732	3

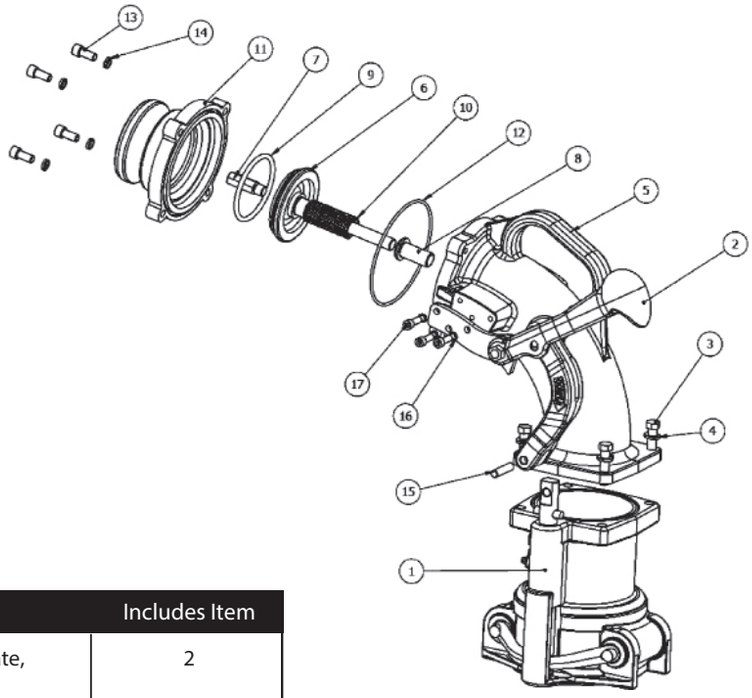

6500 Repair Kits

Part #	Description	Includes Item
VR65000RK1	replacement handle, linkage, mounting plate, bolt, nut, bushing and pins	2
VR6100SPK	replacement (4) body bolts and washers	3, 4
6000NPHK	adapter hardware kit (4) bolts and lock washers	13, 14

Vapour Hose Couplers

- For use with 3" vapour hose
- Cast aluminum body, bronze arms, stainless steel pins and finger rings
- Buna gasket
- VR4030CSAL has Viton poppet seal

Part #	Description
VRC3000AL	3"
VR4030CSNP	4" x 3"
VR4030CSAL	4" x 3" with Poppet

Air Interlocks

5000AI

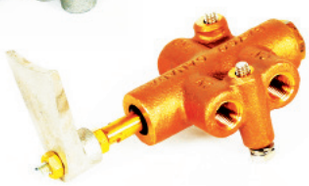

5000AIV

- Mount to API's, vapour valves, and safety bars
- Cast bronze bodies
- Choice of standard piston end or paddle end (for bulb style vapour valve)
- Adjustable to accomodate length variations

Part #	Description
5000AI	Standard piston end
5000AIV	Paddle end for use with VR4000 Vapour Valve only

Inbreathing and Outbreathing Vents

VRP3500

VRV3501

- Installed in vapour plumbing as safety devices to relieve pressure or vacuum build up when vapour systems are blocked during loading/unloading
- 4" TTMA flange mounting (Aluminum)
- Stainless steel shaft and buna seals

Part #	Description
VRP3500	Outbreathing vent (opens at 1 PSI pressure)
VRV3501	Inbreathing vent (opens at 1.5" Hg vacuum)

Pneumatic/Sequential Vapour Vent

- For use with 20" manhole, 4" TTMA bolt pattern mounting
- Safe inward opening valve, easy maintenance of MTBE resistant Viton O-Ring Seals
- Sequencing feature allows control of emergency valve if desired

Part #	Description
VR6035	4"

4" API Valves

API Load/Unload Valve

Part #	Description
5204NG	fixed handle, without sight glass, ALH nose ring, Baylast™ seal
5204	fixed handle, sight glass, ALH nose ring, Baylast™ seal
5204C	removeable handle, sight glass, ALH nose ring, Baylast™ seal
5204NGC	removeable handle, without sight glass, ALH nose ring, Baylast™ seal
5204SNG	fixed handle, without sight glass, ALH nose ring, stainless steel spring for curde oil, Baylast™ seal
5204TNG	fixed handle, without sight glass, ALH nose ring, Teflon® seals
5204NGV	fixed handle, without sight glass, Viton® seals
5204SFI	fixed handle, with inline full body sight glass, ALH nose ring, Baylast™ seal

WE REBUILD APIs

5204 Series, API Bottom Load Valves Parts

Repair Kits

Part #	Description	Includes Item
5204K2	complete rebuild kit: Baylast™ O-rings, bearings	6,10,13,14,16A,17A, 18A,25A,30,35
5204KV2	complete rebuild kit: Viton® poppet O-ring, Baylast™ O-rings, bearings	6,10,13,14,16B, 17B,18B,25B,30,35
5204K3	replacement anodized nose ring with Baylast™ gasket, screws and lock washers	2,17A,24,31
5204K5	replacement detachable handle assembly (for 5204C and 5204NGC)	not illustrated
5204K6	Teflon encapsulated seal kit, poppet O-ring, nose O-ring, shaft O-ring, and sight glass O-ring	16C,17B,18B,25B
5204K7	replacement fixed handle assembly	4,8A,26,27,29,32
5204K8	sight glass repair kit	12,25A,36,37
5204K9	sight glass cover kit (to convert units with sight glass to non-sight)	not illustrated
5204K11	nose ring replacement 8 hex bolts & 8 washers kit	24,31
5204K12	sight glass replacement hardware, 6 hex bolts, 6 lock washers and 4 washers kit replacement full body sight glass, seals and retainer kit	23,26,31
5204K13		38,39,40

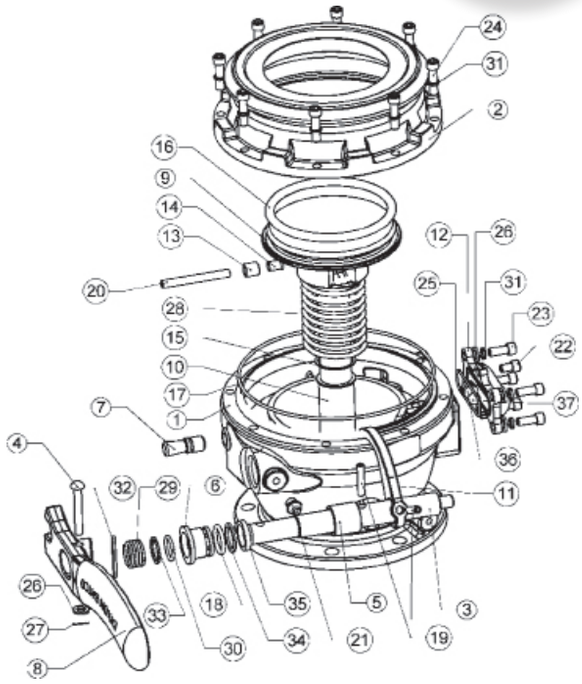

Civacon API Adapter

- Two-piece aluminum construction with a rotatable, hard-coated adaptor for longer life
- Heavy duty poppet with an acetal resin bearing for smoother opening characteristics
- Computer designed cam profile provides easy opening
- Designed in accordance with API RP-1004, with a standard 4" TTMA Flange
- Aluminum-lever resists corrosion and breaking
- Mounting lugs provided for Model 300 Brake Interlock Valve
- Operating lever closes away from the operator with minimal rotation for increased operator convenience
- Compatible with diesel, biodiesel, gasoline, ethanol and methanol
- Flat bottom ensures complete drainage
- Viton GFLT seals are standard for compatibility with fuels and additives
- Improved design minimizes pressure drop
- Stainless steel internals
- Quick-strip can be serviced easily
- Super smooth lever action

Part #
891BA

OPW 1004D4 API Bottom Loading Coupler

Design Parameters	Materials
Max Design Pressure: 125 psi (g), 8.6 bar (g)	Body, Sleeve, Poppet: ASTM B26 Anodized (Aluminum A356-T6)
Max Allowable Working Pressure: 75 psi (g), 5 bar (g)	Cam: ASTM A351 CF8M (316 SST)
Max Flow Rate: 600GPM, 135 M3/H	Cylinder: ASTM SB241 (Aluminum 6061-T6)
Max Temperature:	Shaft: ASTM A564 (13-8 Condition RH 950 SST)
Weight: 18.5 lbs (8.39 kg)	Seals:
Pressure Drop (At Max Flow Rate): 2-5 psi (g), 24 bar (g)	Clevis Pin: ASTM SA564 (17-4 PH SST, H900 Hardened)

Liquip API Bottom Loading Coupler

Part #
API710VG

- Advanced latching mechanism geometry for security and minimal wear.
- Cast stainless steel collar and latches for longer operating life and easy operation.
- Latch spindles are now precision machined and centred, not cast integrally.
- Optional handle sizes, 150mm (6") or 200mm (7.9") swing, incorporates a ball-end for improved ergonomics and a carry-loop to ease the handling during parking.
- Easiest coupler to maintain in today's market. Once the coupler is removed from the load arm, all seals can be replaced in less than five minutes.

Gravity Drop Adapters

- Quality cast aluminum body with inside lip to hang on API while clamping
- Inexpensive replacement of Buna O-Ring seal (Viton seal available)
- Bronze cam arms with Stainless Steel pins and finger rings

4500/4502

4540SG

4540/4530

Part #	Description
4530	3" Outlet
4540	4" Outlet
4540SG	4" Outlet
45004502ASSY	4" Outlet

API Dust Caps

ALUMINUM CAP

NYLON CAP

Part #	Description
41450-DCAL	aluminum API cap with flat gasket
5000-25	nylon API cap with flat gasket, pad lockable arm
5205	aluminum API cap with quick release arm and chain
5000-24	aluminum API cap with O-ring seal

Vent Hood

Part #
VRVH8380

- Designed specifically to fit with Nordic Posi-Vent only. The hood conveniently clamps to the 8 3/8" Posi-Vent outer flange of the mechanical compartment vent which has wide spread use in Canada
- Cast aluminum
- Comes with buna gasket and steel rign clamps for flange mounting
- Machined base for tight gasket seal mounting

Tube Doors

- Welds to standard aluminum hose tube
- Stainless Steel spring
- Lockable
- Quality cast aluminum

Part #	Description
TDF6	used for 6" hose tube
TDF7	used for 7" hose tube
TDF8	used for 8" hose tube

Spring Replacement Kits for Hose Tube Doors

Part #	Description
TDF68RK	6" and 8" repair kit, includes stainless steel spring, bushings and pin
TDF7RK	7" repair kit, includes stainless steel spring, bushings, pin and washer
SPRG-A4630	replacement stainless steel spring only

In-Line Sight Glass

Part #	Description
3544CA	4" Coupler x 4" Adapter
3533CA	3" Coupler x 3" Adapter
3543CA	4" Coupler x 3" Adapter
3534CA	3" Coupler x 4" Adapter
3533AA	3" Adapter x 3" Adapter
3544AA	4" Adapter x 4" Adapter
3534AA	3" Adapter x 4" Adapter
3544CC	4" Coupler x 4" Coupler
3533CC	3" Coupler x 3" Coupler
3543CC	4" Coupler x 3" Coupler

4" Aluminum Dummy Adapter

- Similar to 400-54A tank car collar, but Cast Aluminum
- Welds to Aluminum cabinet for clamp mounting of drop elbows

Part #
AL4051BORE

Grounding Studs

- Solid Brass, Stainless Steel or Aluminum
- With 3/8"-16 UN-3A thread
- For static grounding and overfill protection systems

Part #	Description
BGB	Brass
SSGB	Stainless Steel

SureClean In-line Air Filtration

- Cam levers make inspections quick and painless
- Factory installed seal tabs locking device for tamper proof materials
- Smaller size allows easier installation in tight locations
- Air induction manifold allows air to be evenly distributed across filter. Generating no turbulence and increased airflow with less back pressure and longer filter life
- Lower operating temperature due to even air flow and reduced turbulence
- Connections available grooved, threaded (male or female), cam-lock, or smooth

Part #
Filter

Pneumatic Conveying System Filter

- FDA approvable Medium with 99% maximum efficiency for removing all particles at (1) one micron and larger
- Maximum operating temperature 400˚F
- Will handle air volumes at 1000 CFM with .05 PSI back pressure
- Filter has 91 pleats (1" pleats) with 23.75 sq. ft. of polyester felt media

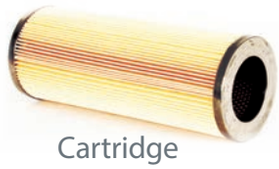

Cartridge

Part #
AFEL16SS

Stainless Steel Cone Strainer

- Installs into a 3" opening (i.e. quick connect female, 3" x 3" adapter) and prevents large objects from entering the cargo pump's intake line
- Allows for 75% fillage before flow is constricted
- Standard SS screens with number 6 mesh, 50 and 100 are also available

Part #	Mesh Sizevv	Description
3C6	6	3" Stainless Steel Cone Strainer

Girard 3" Solid Cap BSP Thread

Part #
GE-3SC-BSP

3" Girard Teflon Gasket

Part #
TR300

Girard 3" Stainless Polymer Fusible

- Chemically inert thermoplastic Polymer used to join two piece cap together
- Large seal tabs
- Seals on an extra thick teflon gasket

Part #
3SPF

Girard 3" Solid Cap

- Syraight thread, seals on gasket
- Large sealing tabs
- Seals on an extra thick teflon gasket
- Swivelhook for attaching cable or chain

Part #
3SC

Girard 3" Stainless Fusible

- Syraight thread, seals on gasket
- Large sealing tabs
- Seals on an extra thick teflon gasket
- Swivelhook for attaching cable or chain

Part #
3SF

Liquid Pressure Relief Valve

Part #	Description
DOT3X407T1-SVL	3" DOT407 Pressure Relief Vent
DOT3X407T25	3" 316SS DOT407 Pressure Relief Valve
DOT3X407T30	3" 316SS DOT407 Pressure Relief Valve
DOT3X407T40	3" 316SS DOT407 Pressure Relief Valve
DOT407LAFTL30	4" Teflon-lined 316SS Pressure Relief Valve
DOT407LT1	4" Female NPT MC407 30PSI Super Tank
DOT407LT1-SVL	4" Female NPT MC407 30PSI Super Tank

Part #	Description
3X407MVBT-T (Teflon®)	3" NPS Thread designed to thread on a 3" nipple

Vacuum Relief Valve

Dual Purpose Vacuum/Pressure Vent

Part #	Design	Weight (lbs.)	Installed Height
DOT3X407T (Teflon®)	3"	11	5 1/4" over top of pipe nipple
DOT407LT	4"	11	5 1/4" over top of pipe nipple

Allehgheny
90° Belled Bend

Aluminum	Steel	Stainless Steel	Description
40126A	-	-	2″ Long Radius
40564A	-	-	2 1/2″ Long Radius
40111A	40090A	SS40124A	3″ Long Radius
40127A	-	-	4″ Long Radius
40634A	-	-	2″ Short Radius
40633A	-	-	3″ Short Radius
40591A	40264A	SS40666A	4″ Short Radius
40821A	-	-	6″ Short Radius

Short Radius Long Radius

* Stainless Steel Parts are 316

45° Belled Bend

Aluminum	Steel	Description
40564C	-	2 1/2″ Long Radius
40111C	-	3″ Long Radius
40127C	40112C	4″ Long Radius
40634C	-	2″ Short Radius
40633C	-	3″ Short Radius
40591C	-	4″ Short Radius

Short Radius Long Radius

Belled Concentric Reducer

Aluminum	Stainless Steel	Description
20340	-	2 1/2″ x 2″
20342	-	3″ x 2 1/2″
20343	-	4″ x 3″
20344	SS20289	6″ x 4″

* Stainless Steel Parts are 304

Short Radius Belled Tee

Aluminum	Stainless Steel	Description
40727B	SS40585B	3″
40727C	-	4″

* Stainless Steel Parts are 316

Loading Racks

Loading racks are designed for single spot or multi-spot loading areas in a variety of heights available to suit specific applications.

We provide guidance and expertise in selecting the right Loading Platform for your application, either standard or custom designed.

Then with our design team we design, engineer and even install your loading rack for truck or railcar loading. Designed for single spot or multi-spot loading, our loading racks represent complete loading and unloading systems.

We have installed dozens of systems around Eastern Canada. Many can be viewed with prior arrangement to see the workmanship and design we provide. All our platforms meet OSHA and MOL standards. We offer after sale support and repair.

Loading Rack

Sliding Gangway

Gangways

Gangways are robust and designed for a wide range of vehicle height variances for operator comfort, maneuverability and safety.
Ontario Hose will visit your site and provide an engineered solution to meet your requirements on time and on budget while meeting MOL (Ministry of Labour) requirements for fall protection.

Truck, barge and marine gangways are designed for a wide range of vehicle heights and variances. Gangways can be retrofitted to your existing structure or customized to your specific application. This is very common with older platforms that were not designed for today's taller railcars.

An Ontario Hose representative will visit your site and provide an engineered solution to meet your requirements on time and on budget while meeting MOL requirements for fall protection.

Gangway Features:

- Lifting of manual units assisted by feather light spring counter-balance
- Built for Canadian Winters
- Locks automatically in upright position with a positive foot lock
- Rugged quality bumpers on the bottom of the unit for vehicle protection
- Widths from 20" to 60"
- 500 lb load capacity to accommodate potential emergency rescue efforts
- Stainless steel hardware and bronze impregnated bushings are provided on all pivot points to ensure long lasting performance

Portable Gangways (PTA)

Portable truck access systems are easy to maneuver with perpendicular or parallel approaches to vehicles.

Loading Arms

Applications:
- Commonly used in the chemical and petroleum industries, Ontario Hose offers engineering, designing and installation of many types and styles of loading arms.

Materials:
- Materials and seals must be generally compatible with product and its temperature during handling. Materials will typically match plant piping on which the arm is installed.
- Carbon Steel, Stainless Steel, aluminum and specialty alloys

Size Range:
- 2", 3", 4", 6"

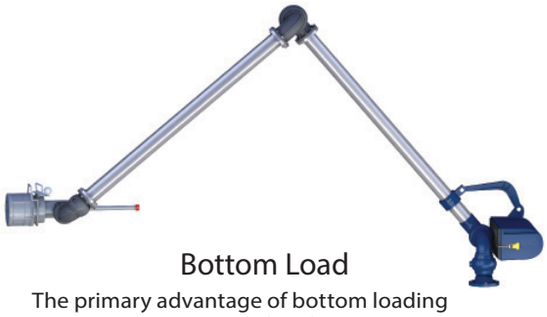

Bottom Load

The primary advantage of bottom loading with a loading arm is safety for the operator. The operator remains on the ground, not on the top of the vehicle, where falls commonly occur.

Additionally connections are made more quickly, bottom loading creates less turbulence in the tank, reducing the danger of static electricity and tanks can be filled faster.

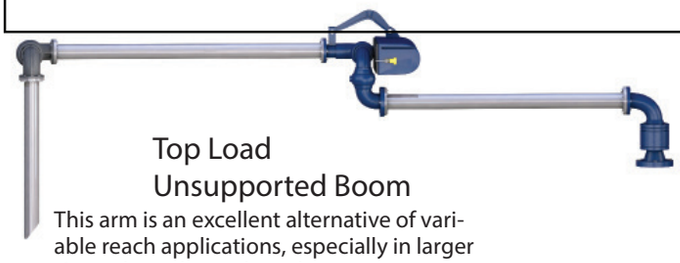

Top Load Unsupported Boom

This arm is an excellent alternative of variable reach applications, especially in larger sizes where the outboard components are relatively heavy. This arm offers the same advantages as the supported boom arm, but maximum reach is somewhat less. Typically used in railcar sites where support columns or overhead structures do not exist to attach the boom to.

Long Reach Bottom Load

Offers all the advantages of bottom loading with a longer reach.

"A" Frame Hose Loader

This spring-balance hose loader is one the more popular loading arms configurations. It provides good flexibility, long-reach, and is convenient and easy to use. This arm stores neatly in the upright position.

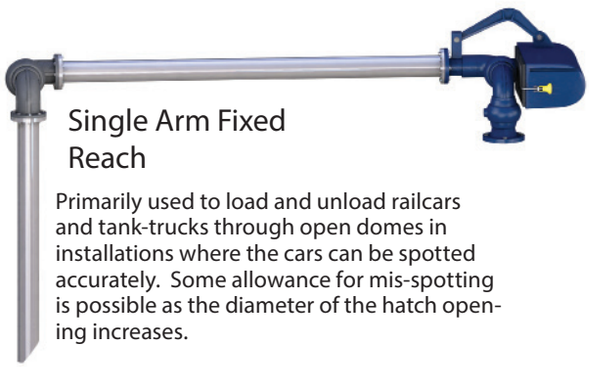

Single Arm Fixed Reach

Primarily used to load and unload railcars and tank-trucks through open domes in installations where the cars can be spotted accurately. Some allowance for mis-spotting is possible as the diameter of the hatch opening increases.

Top Load Long Reach Supported Boom

This style arm provides dependable low maintenance service in high-usage installations.
Due to the boom-mounted design, no heavy loads are placed on the swivel components to help minimize wear.

Ontario Hose has CRN Certification for Loading Arms!

White Teflon Tape

Part #
WTT

- White threaded sealing tape
- 1/2" x 40'

Pink Teflon Tape

Part #
PTT

- Pink threaded sealing tape
- 1/2" x 45'

Lubricated Teflon Rope Packing

Size	Part #
3/16	TP016LUB
1/4	TP025LUB
3/8	TP038LUB
1/2	TP050LUB
5/8	TP058LUB
3/4	TP075LUB

- Braided
- Non-asbestos
- Lubricated

20" Hatch Gasket - White Hypalon

Size	Part #
10	3567WH
20	3513WH

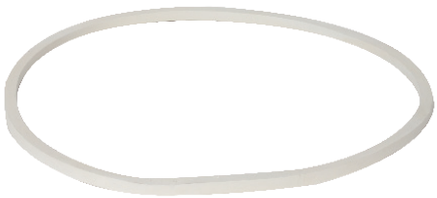

Automatic Shut-Off Nozzle

Features:
- For card lock and truck refueling stations
- Venturi type automatic shut-off
- High pressure design for up to 80 gpm flow (requires minimum 7.5 gpm for auto shut-off)
- Detachable trigger ratchet
- Aluminum construction with bronze trigger

Inlet x Spout Size (in.)	Part #
1 1/4″ x 1 1/4″	NOZ1144D
1 1/2″ x 1 1/2″	NOZ1124D

Ball Nozzle for Bulk Delivery

Features:
- Rugged construction for rapid fuel oil transfer/delivery
- Built-in swivel inlet with check valve outlet
- Includes spout

Inlet x Spout Size (in.)	Part #
1 1/4″ x 1 1/4″	BL066
1 1/4″ no spout	BL066NS
1 1/2″ x 1 1/4″	BL068

Gas Pump Nozzle

Features:
- Factory Rebuilt Automatic Nozzle

NOZ7HB shown in photo

Description	Part #
3/4″ Full Service Leaded Nozzle	NOZFSL11A
3/4″ Full Service Unleaded Nozzle	NOZFSUL11A
3/4″ Self Service Leaded Nozzle	NOZSSL11A
3/4″ Self Service Unleaded Nozzle	NOZSSUL11A
1″ Truck Stop Fuel Nozzle	NOZ7HB

Nozzle Accessories

Description	Part #
Replacement spout - 1144D nozzle	BL144
Replacement spout - 1124D nozzle	BL124
Spout for 7H nozzle	NOZSP7H
Spout for 7HB Diesel nozzle	NOZSP7HB

Hose Swivels

Male NPT x Female NPT Size	Part #
3/4″	36S5080
1″	36S5090
1 1/4″	SWMF125
1 1/2″	SWMF150
2″	SWMF200

- For use with petroleum and home heating oil hose
- Prevents twisting or kinking
- SWMF 125, SWMF 150 and SWMF200 are made in Bayloy

Grooved Pipe Coupling - Flexible

Bolted Style 75

Size	EPDM (water)	BUNA (fuel)	Viton (chemical fuels)	White (food)
1	VC75E100	VC75B100	VC75V100	VC75W100
1 1/4	VC75E125	VC75B125	VC75V125	VC75W125
1 1/2	VC75E150	VC75B150	VC75V150	VC75W150
2	VC75E200	VC75B200	VC75V200	VC75W200
2 1/2	VC75E250	VC75B250	VC75V250	VC75W250
3	VC75E300	VC75B300	VC75V300	VC75W300
4	VC75E400	VC75B400	VC75V400	VC75W400
6	VC75E600	VC75B600	VC75V600	VC75W600
8	VC75E800	VC75B800	VC75V800	VC75W800

Replacement Gaskets for all Pipe Couplings

Size	EPDM (water)	BUNA (fuel)	Viton (chemical fuels)	White (food)
1	G100EPT	G100BU	G100VI	G100WBU
1 1/4	G125EPT	G125BU	G125VI	G125WBU
1 1/2	G150EPT	G150BU	G150VI	G150WBU
2	G200EPT	G200BU	G200VI	G200WBU
2 1/2	G250EPT	G250BU	G250VI	G250WBU
3	G300EPT	G300BU	G300VI	G300WBU
4	G400EPT	G400BU	G400VI	G400WBU
6	G600EPT	G600BU	G600VI	G600WBU
8	G800EPT	G800BU	G800VI	G800WBU

Grooved Pipe Coupling - Snap Joint

Toggle Style 28

Size	EPDM (water)	BUNA (fuel)	Viton (chemical fuels)	White (food)
1	VC78E100	VC78B100	VC78V100	VC78W100
1 1/4	VC78E125	VC78B125	VC78V125	VC78W125
1 1/2	VC78E150	VC78B150	VC78V150	VC78W150
2	VC78E200	VC78B200	VC78V200	VC78W200
2 1/2	VC78E250	VC78B250	VC7V8250	VC78W250
3	VC78E300	VC78B300	VC78V300	VC78W300
4	VC78E400	VC78B400	VC78V400	VC78W400
6	VC78E600	VC78B600	VC78V600	VC78W600
8	VC78E800	VC78B800	VC78V800	VC78W800

Pipe Coupling - Aluminum

Coupling Material:

- These couplers are superior to other couplers on the market today for the transportation industry. They are completely manufactured out of 713 aluminum and stainless steel for light weight and have SAE 841 oil impregnated bronze bushings in all pivot points. The couplers are corrosion resistant, they are adjustable, and are also easy to operate.

I.D. (in.)	O.D. (in.)	Material	Weight (lbs)	Pipe Connection	Part #
3	3.500	Aluminum Clamp & SS Hardware	1.75	Groove to Groove	632GGW300
4	4.500	Aluminum Clamp & SS Hardware	2.6	Groove to Groove	635GGW400
4	4.500	Aluminum Clamp & SS Hardware	2.8	Groove to Plain	635GPW400
4	4.500	Aluminum Clamp & SS Hardware	2.8	Plain to Plain	635PPW400
5	5.500	Aluminum Clamp & SS Hardware	3.5	Groove to Groove	637GGW500
6	6.625	Aluminum Clamp & SS Hardware	4.0	Groove to Groove	639GGW600

Pipe Coupling - Plastic

Coupling Material:

- A polymer plastic pipe fitting made of Dupont Zytel makes the SLT735 pipe coupling Light, Stronger, and tougher on corrosion. Lighter weight, almost 40% lighter than comparable couplers. Stronger than standard aluminum couplers and tougher on corrosion.

Benefits:

- No product entrapment
- Inexpensive replacement

I.D. (in.)	O.D. (in.)	Material	Weight (lbs)	Pipe Connection	Part #
4	4.500	Engineered Polymer & SS Hardware	1.6	Grooved to Grooved Pipe	735GGW400
4	4.500	Engineered Polymer & SS Hardware	1.8	Plain to Plain Pipe	735PPW400
4	4.500	Engineered Polymer & SS Hardware	1.9	Grooved to Plain Pipe	735GPW400

Heavy Duty Absorbent Pads

- 17″ x 19″
- No Lint
- 100/Bale

Type of Spill	Colour	Volume	Part #
Oil	White	12oz	WPH100
Oil	Blue	12oz	BBPZ
Chemical	Yellow	12oz	OSU170

Light Weight Absorbent Pads

- 17″ x 19″
- No Lint
- 100/Bale

Type of Spill	Colour	Volume	Part #
Oil	White	6oz	WPH200
Oil	Blue	9oz	11470
Chemical	Yellow	9oz	OSU120

Absorbent Boom

- OIL ONLY!
- 4/Bag
- Designed to lay across water to absorb and contain petroleum spills

Dimensions	Colour	Part #
5″ x 10′	White	OS510SN
5″ x 10′	Grey	CS510
8″ x 10′	White	OS810SN
8″ x 10′	Grey	CS810

Absorbent Socks

- OIL ONLY!
- 4/Bag
- Designed for tight spaces for quick oil clean up

Dimensions	Colour	Part #
3″ x 4′	White	OSB30
3″ x 4′	Blue	10005
3″ x 4′	Grey	OSC30

Emergency Spill Kit

Each kit contains the following items contained in a bright red vinyl carry bag marked EMERGENCY SPILL KIT

- Oil or Chemical Specific 17"x19" Sorbent Pads (10 each)
- Oil or Chemical Specific 3" x 48" Sorbent Socks (4 each)
- 36" x 36" x 1 1/16" Drain Cover (1 each)
- 40" x 60" Disposal Bag (1 each)
- Pair of Rubber Gloves (1 each)
- Pair of Safety Goggles (1 each)

Type of Spill	Part #
Oil Chemical	MSK6 MSKCH6

Drum Spill Kit - 10 Gallon

Each kit containes the following items:

- 10 Gallon WeatherProof Polyethylene Drum with Lever Lock Closure
- Assorted contents to provide appropriate spill response
- Call for details

Type of Spill	Part #
Oil Chemical	DSK10 DSK10C

Gorillazorb Floor Dry

- Clay based granular absorbent
- Works similar to "Kitty Litter"
- WHMFS controlled

Weight/Bag	Part #
50 LBS	ZORBALL

Cotton Drill Work Gloves

- Men's 8 oz. cotton knitwrist
- Packaged 25 doz/case or 50 doz/bale

Part #
GL00000

Premium Split Leather

- Men's split leather palm, striped cotton back, starched cuff riggers glove
- Packaged 10 doz/case

Part #
GL1400XL

PVC Yellow Dipped Gloves

- Lato-Grip Men's 12" yellow PVC-coated gauntlet

Part #
GL1811

Nitrile-Coated Cotton Gloves

- Fully-coated 2.5" Safety cuff
- Nitrile coated abrasion resistant hycron gloves

Part #
GL27805

Pylons

Size	Part #
18	PYL18
36	PYL36

Goggles

Part #
SG

Safety Lite

- Explosion proof
- Circuit breaker
- Colour-coded for identification
- Switch guard

Part #
FL2117

Hose Handle

Handle-Tech handles are a ground breaking safety tool for today's oil and gas industry. The easy to use mechanism enables you to clamp onto hoses or pipes easily without damaging or breaking the hose while allowing you to safely grip, torque, and release single-handedly through a natural fluid movement.

Through mud, cold, rain, or sleet, Handle-Tech's innovative design allows your workers to safely and efficiently manipulate hoses and pipes in any climate or location.

Size	Part #
4	400SUC
6	600SUC

Stretch Straps

Part #	Length	Description
SSE21	21"	Stretch Strap Bungee Cord

- 21" long tie down strap (EPDM rubber with steel "S" hooks)

Safety Cable

Part #	Length	For Hose Diameter	Diameter of Cable
IWB1	18"	1/2" - 1 1/4"	1/8"
IWA2	30"	1 1/2" - 3"	1/4"

- 22" long safety cable, corrosion and rust resistant

Cam Arm Tie Down Velcro Straps

Size	Part #
18" long x 1 1/2"	VLS1501800
30" long x 1 1/2"	VLS1503000
75' roll x 1 1/2"	94905K73

Product Tags

Description	Material	Description	Material
25000 Liters Capacity	Plastic	Lubricating Oil	Plastic
45400 Liters Capacity	Plastic	2270 LitersCapacity	Aluminum
50000 Liters Capacity	Plastic	25000 Liters Capacity	Aluminum
AVGAS 100	Plastic	45400 Liters Capacity	Aluminum
AVGAS 100LL	Plastic	50000 Liters Capacity	Aluminum
AVGAS80	Plastic	Furnace Dyed	Aluminum
Diesel	Plastic	Mid Grade	Aluminum
Diesel	Aluminum	Oil	Plastic
Dyed Diesel	Plastic	Premium	Plastic
Dyed Mines Diesel	Plastic	Premium	Aluminum
Diesel Low Sulphur	Plastic	Premium Dyed	Plastic
Diesel Low Sulphur	Aluminum	Product Left on Truck	Plastic
Dyed Diesel Low Sulphur	Plastic	Plain Yellow	Plastic
Ethanol Regular	Plastic	Regular	Plastic
Ethanol Mid Grade	Plastic	Regular	Aluminum
Ethanol Premium	Plastic	Regular Dyed	Plastic
Ethanol Unleaded	Plastic	Stove	Plastic
Furnace	Plastic	Stove Dyed	Aluminum
Furnace Dyed	Plastic	Generic	Aluminum
Jet A	Plastic	Super Premium	Plastic
Jet A-1	Plastic	Super	Plastic
Jet B	Plastic	Unleaded Regular	Plastic
Kerosene	Plastic	WB Oil	Plastic
Kerosene Dyed	Plastic		
Leaded	Plastic		
Diesel Low Sulphur	Plastic		
Leaded Gasoline Dyed	Plastic		

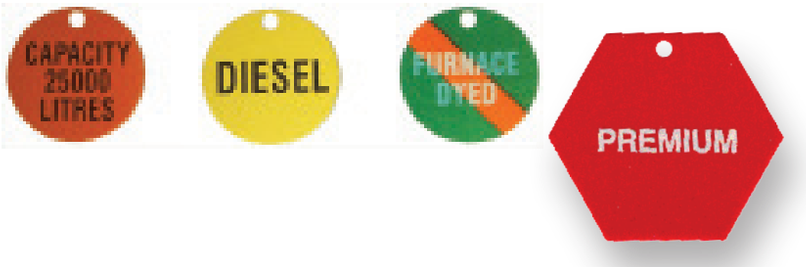

Hose Tags -
Ontario Hose

Part #
OHTAGSS

Changeable Digit-Flip

For the ultimate in convenience, flexibility and time saving, Duo-Flip allows you to change both DOT placard legends and ID numbers in seconds to match your commodity. This Duo-Flip 8-Legend Flip Placard System includes 9 placard panels in a single full frame:

- Inhalation Hazard 2
- Flammable Liquid 3
- Combustible 3
- Oxidizer 5.1
- Inhalation Hazard 6
- Poison 6
- Corrosive 8
- Miscellaneous 9
- Blank

Part #
DFP58632

Value Added Services

Ontario Hose offers a value added program such as:

1. Hose Safety Audit - We will perform and audit any or all hoses in your facility, record this information in a data base and present the findings to you.

2. Hose Maintenance Reports - These are monthly reports available to you documenting hoses tested, purchased and repaired.

3. Spill / Failure Investigation - Incident reports relating to hose failures or spills.

4. Inventory Control and Cost Reduction - Offer guidance with product selection and mix.

5. Delivery Services - All our locations use company owned vehicles to pick up and deliver to or from your premises (where practical).

6. Hose Testing - All hoses are tested before they leave our premises!

7. On Site Testing - We will test and certify your hoses at your location.

8. On Site Training - How to test hoses, attach end fittings, how to be safe using hoses and hose storage.

9. Hosetracker - Proprietary software developed by Ontario Hose to track and record hoses all on the web.

10. CRN - Supplying the widest range of hoses when CRN certification is required.

11. B620-09 - We provide training, certification and testing so your company hoses comply with B620-09.

HOSETRACKER

Hose Identification

- All Hoses are labeled with a pneumatically stamped stainless steel identification tag containing hose number, company name, PSI of test, date of test, and the next due test.
- Tags are secured to the hose using two stainless steel attaching bands.
- In addition, hose ID and manufacture date are stamped under each cam arm for both drop hoses and chemical hoses.

Information Tracked:

- Company name
- Hose number
- Type of hose
- Diameter and Length of Hose
- Fittings
- Unit Number (trailer number, etc…)
- Location (branch location)
- Hydro Test Date
- Static Test Date
- Pressure of Hydro Test
- Service status (in service, stock, etc…)
- Service date
- PO and Invoice Number
- Previous hose number (if applicable)
- Date and User who made entry

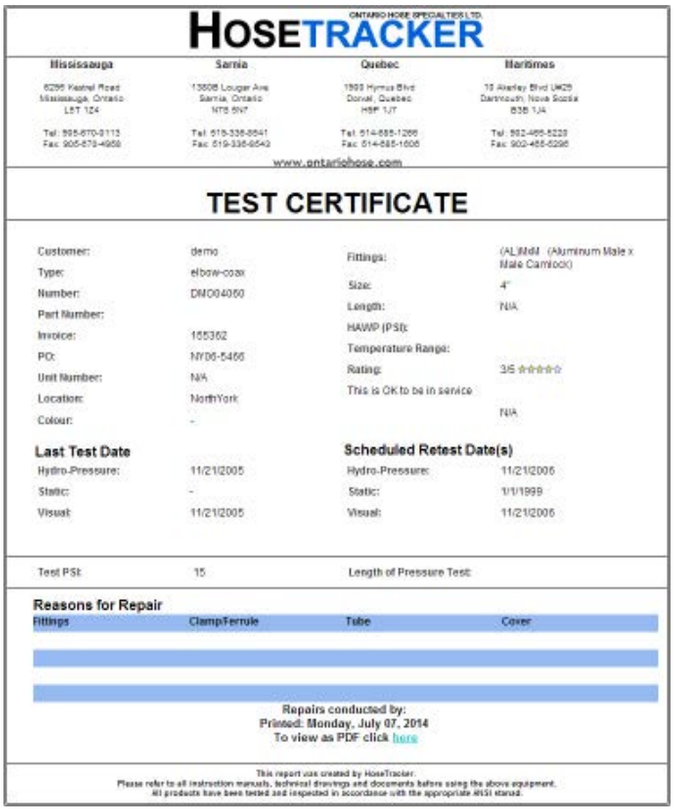

HOSETRACKER ONTARIO HOSE SPECIALTIES LTD.

Mississauga	Sarnia	Quebec	Maritimes
6295 Kestrel Road Mississauga, Ontario L5T 1Z4 Tel: 905-670-3113 Fax: 905-670-4950	13608 Lougar Ave Sarnia, Ontario N7S 5N7 Tel: 519-336-6641 Fax: 519-336-6543	1995 Hymus Blvd Dorval, Quebec H9P 1J7 Tel: 514-685-1266 Fax: 514-685-1606	10 Akerley Blvd Unit5 Dartmouth, Nova Scotia B3B 1J4 Tel: 902-465-5223 Fax: 902-465-5296

www.ontariohose.com

TEST CERTIFICATE

Customer:	demo	Fittings:	(AL)Mdl (Aluminum Male x Male Camlock)
Type:	elbow-coax	Size:	4"
Number:	DM004060	Length:	N/A
Part Number:		HAWP (PSI):	
Invoice:	165362	Temperature Range:	
PO:	NY06-5466	Rating:	3/5 ★★★☆☆
Unit Number:	N/A	This is OK to be in service	
Location:	NorthYork		N/A
Colour:	-		

Last Test Date		Scheduled Retest Date(s)	
Hydro-Pressure:	11/21/2005	Hydro-Pressure:	11/21/2006
Static:	-	Static:	1/1/1999
Visual:	11/21/2005	Visual:	11/21/2006

Test PSI:	15	Length of Pressure Test:	

Reasons for Repair

Fittings	Clamp/Ferrule	Tube	Cover

Repairs conducted by:
Printed: Monday, July 07, 2014
To view as PDF click here

This report was created by HoseTracker.
Please refer to all instruction manuals, technical drawings and documents before using the above equipment.
All products have been tested and inspected in accordance with the appropriate ANSI stanad.

All About CRN Hoses

When you purchase a CRN certified hose from Ontario Hose, you are not only purchasing a hose, you are also purchasing traceability, safety and integrity.

Each CRN hose has its own individual engineering drawing, component list, assembly procedure, test procedure, tracking procedure, test certificate, and CRN tag. By using unique individual hose ID number Ontario Hose can tell you the complete history of your hose from when the components were first purchased to who actually put the CRN tag onto the hose assembly.

What is a CRN Number?

CRN stands for Canadian Registration Number. This is a number issued by TSSA to a company signifying that the hose assemblies produced by that company comply with the requirements of TSSA.

Who is TSSA?

TSSA is the Technical Standards and Safety Authority. They are an independent, non-government, not-for-profit organisation responsible for the regulation of boilers, pressure vessels, pressure piping, fittings and hose assemblies.

What does a CRN number do for me?

A CRN number attached to a hose assembly by a metal tag with a CRN number stamped on it means that the hose assembly meets or exceeds the requirements of TSSA for hose assemblies.

Am I safer using a CRN certified hose than a non certified hose?

YES - a CRN certified hose means that all procedures from ordering the materials to attaching the CRN hose tag are documented checked and tested to insure that the hose assembly you purchase will perform the way it is designed to work.

Can used hoses be certified for CRN?

No - If not previously CRN certified by Ontario Hose
Yes - If previously CRN certified by Ontario Hose

Can any company certify a hose to be CRN approved?

No - Only companies that have been inspected and certified by TSSA are qualified to produce hose assemblies with a CRN certification.

Ontario Hose was one of the first companies to be approved to produce all six categories of CRN hoses.

6 CRN Categories

1. Rubber Hose
2. Rubber Steam Hose
3. Rubber Air/Nitrogen Hose
4. Teflon Lined Stainless Steel Hose
5. Composite Hose
6. Metal Hose

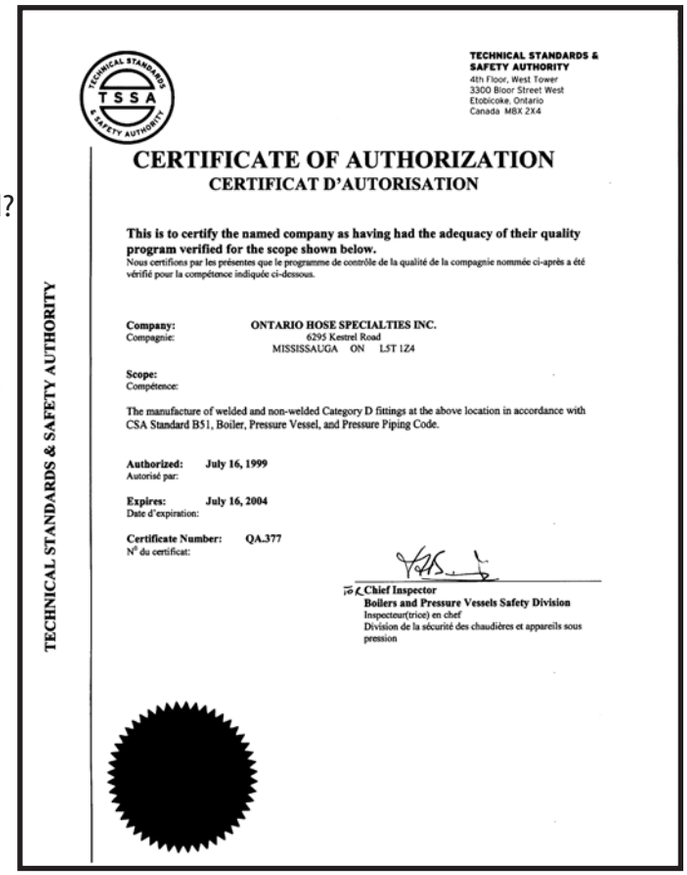

TECHNICAL STANDARDS & SAFETY AUTHORITY
4th Floor, West Tower
3300 Bloor Street West
Etobicoke, Ontario
Canada M8X 2X4

TECHNICAL STANDARDS & SAFETY AUTHORITY

CERTIFICATE OF AUTHORIZATION
CERTIFICAT D'AUTORISATION

This is to certify the named company as having had the adequacy of their quality program verified for the scope shown below.
Nous certifions par les présentes que le programme de contrôle de la qualité de la compagnie nommée ci-après a été vérifié pour la compétence indiquée ci-dessous.

Company: / Compagnie: **ONTARIO HOSE SPECIALTIES INC.**
6295 Kestrel Road
MISSISSAUGA ON L5T 1Z4

Scope: / Compétence:

The manufacture of welded and non-welded Category D fittings at the above location in accordance with CSA Standard B51, Boiler, Pressure Vessel, and Pressure Piping Code.

Authorized: / Autorisé par: **July 16, 1999**

Expires: / Date d'expiration: **July 16, 2004**

Certificate Number: / N° du certificat: **QA.377**

for **Chief Inspector**
Boilers and Pressure Vessels Safety Division
Inspecteur(trice) en chef
Division de la sécurité des chaudières et appareils sous pression

B620-14
Hose Assembly Inspection and Testing for Highway Tanks

7.2.10 Hose Assembly inspection and testing

7.2.10.1

The hose testing requirements specified in Clauses 7.2.10.4 to 7.2.10.9 shall apply to product delivery and vapour return hose assemblies that are temporarily connected between the tank or any tank-mounted accessory and the point of supply or receipt during loading or off-loading but shall not apply to hose assemblies that are part of the piping system and are pressure tested in accordance with Clause 7.2.7.7.

7.2.10.2

Despite Clauses 7.1.1 and 8.1.1, a competent facility that has knowledge of the hose testing requirements need not be registered to test and inspect a hose assembly.

7.2.10.3

Personnel performing the inspections and test specified in Clauses 7.2.10.4 and 7.2.10.5, respectively, shall be trained in product and hose safety, inspection and test procedures, and rejection criteria. A record of this training shall be kept in the employment files of those personnel.

7.2.10.4

Hose assemblies shall be inspected annually for

(a) damage to the hose cover that exposes the reinforcement;
(b) kinked flattened, or permanently deformed wire braid;
(c) soft spots when not under pressure, buldge under pressure, or loose outer covering;
(d) damaged, slipping, or excessively worn hose couplings;
(e) loose or missing bolts or fastenings on bolted hose coupling assemblies;
(f) deteriorated legibility or absence of the serial or identification number and HAWP

7.2.10.5

Each hose assembly shall be pressure tested annually in accordance with the following:

(a) A hose assembly having any damage identified in CLause 7.2.10.4 shall be taken out of service and not be pressue tested until repaired.

(b) The test pressure shall be the greater of 120% of the marked HAWP of the hose assembly and 518 kPa (75 psi) except that

(i) for CSA-certified hose assemblies, it shall be not less than 1552 kPa (225 psi);
(ii) for gravity off-load hose assemblies (drop hoses), it shall be not less than 69 kPa (10 psi);

(iii) for vacuum hose assemblies on tanks loaded by vacuum, used exclusively for vacuum loading, and marked "vacuum only" in place of HAWP as specified in Clause 7.2.10.6, the test pressure shall not be less than 69 kPa (10 psi); and

(iv) the pressure test does not apply to vacuum hoses that are
(1) an integral part of boom assembly or vacuum system on tanks loaded by vacuum; and
(2) used exclusively for vacuuming loading.

B620-09 (con't)

(c) For hose assemblies that are not CSA-certified hose assemblies, the following shall not be used to presurize the hose assembly:

(i) compressed gas;
(ii) compressed air;
(iii) flammable liquid
(iv) corrosive liquid.

NOTE: Water is the recommended test fluid.

(d) The requirements of Item (c) shall not apply to hose assemblies used to handle aircraft fuel.

(e) Provisions shall be made to protect personnel during testing should failure occur.

(f) To pass the pressure test, the hose assembly shall hold the pressure without bulging, distortion, or leaks for at least 5 min. when isolated from the pressure supply.

7.2.10.6

A hose assembly that has passed the inspection and pressure test shall be marked in a manner that will endure the rigours of daily use, either by stamping on an end fitting or by using a securely attached metal tag or washer, in letters not less the 5 mm (0.2 in) high, with the month and year of the test and inspection. The depth and location of the stamping shall not degrade the pressure rating of the hose. A hose assembly not already marked in accordance with the requirements of Clause 5.1.2.6 or 6.1.3.5 shall be marked as specified in Clause 7.2.10.10

7.2.10.7

Following an inspection or test, a report outlining the results shall be prepared by the facility performing the hose testing and inspection and shall be retained for at least two years by this facility and by the hose assembly owner. The report need not comply with Clause 7.3 but shall identify the name and address of the facility responsible for the inspection and test, the hose assembly serial or identification number, the HAWP, the date and the nature of the inspection or test.

7.2.10.8

A hose assembly that is held in stock following an inspection and test shall be marked as described in Clause 7.2.10.6 with the letters "IS" and the date that it is returned to service, if it is visually inspected in accordance with Clause 7.2.10.4 immediately prior to its return to service. The next annual inspection and pressure test shall be performed within tweleve months of this in-service date. If the hose assembly is stored for more than a year, the test and inspection reports shall be retained by the owner until the next annual inspection and test are completed.

7.2.10.9

New or repaired hose assemblies shall be visually inspected as specified in Clause 7.2.10.4, tested as specified in Clause 7.2.10.5, and marked as specified in Clause 7.2.10.6 or 7.2.10.8.

7.2.10.10

The HAWP for a hose assembly that in not already marked may be determined by referring to documentiation provided by the hose and coupling manufacturer or supplier or by inspecting the hose and couplings for markings applied during manufacturing that indicate the maximum working pressure for the component. A HAWP that corresponds to the maximum working pressure of the lowest rated component of the hose assembly, or the maximum anticipated pressure that the hose is expected to see in service, whichever is less, shall be marked on a hose that is successfully tested in accordance with Clause 7.2.10.5. Hose assemblies for which ratings cannot be determined shall not be marked. If not already marked on the hose assembly, markings shall also be applied to indicate the serial number or identification number of the hose assembly.

Index

#

150# Flange ANSI B16.5 77
16" PAF 406-98 Manhole 106
16" PAF 406-98 Manhole Parts 107
201 Stainless Steel Banding 90
2-Bolt Type - Steam Fitting 79
3" Girard Teflon Gasket 128
300# Flange ANSI B16.5 77
316 Stainless Steel NPT Ends 84
316 Stainless Steel Pipe Fitting - Close Nipple 67
316 Stainless Steel Pipe Fitting - Coupling 66
316 Stainless Steel Pipe Fitting - Elbow 45° 66
316 Stainless Steel Pipe Fitting - Elbow 90° 66
316 Stainless Steel Pipe Fitting - Half Coupling 66
316 Stainless Steel Pipe Fitting - Nipple 67
316 Stainless Steel Pipe Fitting - Pipe Fittings 66
316 Stainless Steel Pipe Fitting - Round Cap 66
316 Stainless Steel Pipe Fitting - Square Plug 66
316 Stainless Steel Pipe Fitting - Street Elbow 45° 66
316 Stainless Steel Pipe Fitting - Street Elbow 90° 66
316 Stainless Steel Pipe Fitting - Tee 66
316 Stainless Steel Pipe Fitting - Union 66
4" Aluminum Dummy Adapter 127
4" API Valves 125
4" Vapour Caps 116
4-Bolt Type 2 Gripping Fingers - Steam Fitting 79
5204 Series, API Bottom Load Valves Parts 125
6200 Repair Kits 122
6500 Repair Kits 123

A

Absorbent Boom 138
Absorbent Socks 138
Adapter with Straight Pipe Thread (NPSM 20
Adapter x Round Tank Truck Flange 61
Adapters x 150# Flanged Drilling 61
Air Cylinder Parts 115
Air Interlocks 124
Air King - Lanyards 45
Air King - Safety Clips 45
Air King - Washers 45
Air King Universal Couplings - Blank Ends 45
Air King Universal Couplings - Female NPT Ends 45
Air King Universal Couplings - Hose Ends 45
Air King Universal Couplings - Male NPT Ends 45
Allehgheny - 45° Belled Bend 129
Allehgheny - 90° Belled Bend 129
Allehgheny - Belled Concentric Reducer 129
Allehgheny - Short Radius Belled Tee 129
Aluminum - Victaulic 71
Aluminum Butt Ends 84
Aluminum Dig Tubes 120 Wall - 6" Flat Flange x Flate Flange 83
Aluminum Dig Tubes 120 Wall - 6" Flat Flange x Urethane Tip 83
Aluminum Dig Tubes 120 Wall - 6" Male Bush Hog x Nozzle (CROWN 83
Aluminum Dig Tubes 120 Wall - 6" Male Bush Hog x Urethane Tip 83

A (con't)

Aluminum Dig Tubes 120 Wall - 6" Male x Female Bush Hogs 83
Aluminum Dig Tubes 120 Wall - 8" Flat Flange x Flate Flange 83
Aluminum Dig Tubes 120 Wall - 8" Flat Flange x Urethane Tip 83
Aluminum Dig Tubes 120 Wall - 8" Male Bush Hog x Nozzle (CROWN) 83
Aluminum Dig Tubes 120 Wall - 8" Male Bush Hog x Urethane Tip 83
Aluminum Dig Tubes 120 Wall - 8" Male x Female Bush Hogs 83
Aluminum NPT Ends 84
Aluminum Pipe Fittings - Close Nipple 70
Aluminum Pipe Fittings - Nipple 70
Aluminum Rainway Gaskets 82
ANSI 150# Flange 49
API Dust Caps 126
Automatic Shut-Off Nozzle 134

B

Ball Nozzle for Bulk Delivery 134
Banding Tool 92
Bauer Coupling - Ball 80
Bauer Coupling - Ball with Shank 80
Bauer Coupling - End Cap 80
Bauer Coupling - Lever Closing Ring 80
Bauer Coupling - Rubber Seal 80
Bauer Coupling - Socket 80
Bauer Coupling - Socket with Shank 80
Black Sanitary Gaskets 76
Blacksnake Curb Pump Hose 33
Blue Sewer Flushing Hose 40
Boom Hose Red Tube - Hardwall 21
Boom Hose Tan Tube - Hardwall 21
Boston Chemcat (UHMW) Hose 8
Bottom Unit for Side Lever Elbows - Repair Kits 120
Brass Barbed Hose Mender 85
Brass NPT Ends 84
Bray 30 Series Butterfly Valve-Black Seat/Carbon Disk 95
Bray 30 Series Butterfly Valve-White Seat/ S.S. Disk 95
Bush Hog - 45° Elbow 81
Bush Hog - 90° Elbow 81
Bush Hog - End Cap 81
Bush Hog - End Plug 81
Bush Hog - Female Coupler 81
Bush Hog - Male Coupler 81
Bush Hog - Reducer 81
Bush Hog - Relief Valve 81
Bush Hog - Square Back Gasket 81
Bush Hog - Wye 81

C

Cam Arm Tie Down Velcro Straps 141
Cam Arms, Rings, and Pins - Dixon - Domestic 60
Cam Arms, Rings, and Pins - Dixon and PT 60
Cam Arms, Rings, and Pins - Import 60
Cam Couplings - Domestic A 50
Cam Couplings - Domestic B 50

C (con't)

Cam Couplings - Domestic C 50
Cam Couplings - Domestic D 51
Cam Couplings - Domestic DP 52
Cam Couplings - Domestic E 51
Cam Couplings - Domestic F 51
Cam Couplings - Import A 54
Cam Couplings - Import B 54
Cam Couplings - Import C 54
Cam Couplings - Import D 55
Cam Couplings - Import DP 56
Cam Couplings - Import E 55
Cam Couplings - Import F 55
Cam Locks - Dixon EZ Boss-Lock 58
Cam Locks - Neco Double-Lok 58
Cam Locks - OPW Autolok 58
Cam Locks - PT Sta-Lok II 58
Carbon Steel - Victaulic 71
Carbon Steel Sch 40 - Close Nipple 63
Carbon Steel Sch 40 - Nipple 63
Carbon Steel Sch 40 Pipe Fitting - Coupling 62
Carbon Steel Sch 40 Pipe Fitting - Elbow 45° 62
Carbon Steel Sch 40 Pipe Fitting - Elbow 90° 62
Carbon Steel Sch 40 Pipe Fitting - Half Coupling 62
Carbon Steel Sch 40 Pipe Fitting - Round Cap 62
Carbon Steel Sch 40 Pipe Fitting - Square Plug 62
Carbon Steel Sch 40 Pipe Fitting - Street Elbow 45° 62
Carbon Steel Sch 40 Pipe Fitting - Street Elbow 90° 62
Carbon Steel Sch 40 Pipe Fitting - Tee 62
Carbon Steel Sch 40 Pipe Fitting - Union 62
Carbon Steel Sch 80 Pipe Fitting - Close Nipple 65
Carbon Steel Sch 80 Pipe Fitting - Coupling 64
Carbon Steel Sch 80 Pipe Fitting - Elbow 45° 64
Carbon Steel Sch 80 Pipe Fitting - Elbow 90° 64
Carbon Steel Sch 80 Pipe Fitting - Half Coupling 64
Carbon Steel Sch 80 Pipe Fitting - Nipple 65
Carbon Steel Sch 80 Pipe Fitting - Round Cap 64
Carbon Steel Sch 80 Pipe Fitting - Square Plug 64
Carbon Steel Sch 80 Pipe Fitting - Street Elbow 45° 64
Carbon Steel Sch 80 Pipe Fitting - Street Elbow 90° 64
Carbon Steel Sch 80 Pipe Fitting - Tee 64
Carbon Steel Sch 80 Pipe Fitting - Union 64
Center Punch Clamps 89
Center Punch Tool 91
CH47003SST Internal Chemical Hydraulic Valve Parts 101
Changeable Digit-Flip Placard 143
Check Valves 94
Chemical Hydraulic Valve 102
Chemical Hydraulic Valve Parts 103
Chlorobutyl Steam Hose 34
Civacon API Adapter 125
Clear PVC Tubing - Food Grade Hose 13
Clear Reinforced PVC Tubing - Food Grade Hose 13
Co-Axial Elbow 119
Co-Axial Elbow Parts 121
Co-Axial Elbow Repair Kits 121
Cotton Drill Work Gloves 140

C (con't)

Coupler with Straight Pipe Thread (NPSM) 20
Coupler x Round Tank Truck Flange 61
Couplers x 150# Flanged Drilling 61
Coupling with Female Spud - Steam Fitting 78
Crown 82

D

Dig Tube Clamp 82
Double Bolt Clamps 93
Double Spud - Steam Fitting 78
Drum Spill Kit - 10 Gallon 139
Dry Bulk - 3" & 4" Swing Check Valves 118
Dry Bulk - Air Pressure Relief Valves 117
Dry Bulk - Vacuum Relief Valves 117
Dry Material Discharge Hose - Softwall 18
Dust Caps - Domestic 52
Dust Caps - Import 56

E

Elbow Parts Repair Kits 120
Elbow Parts Top Side Lever Elbow 120
Emergency Spill Kit 139
Epsilon Low Spill Coupling System 75

F

Farm Tank Static Wire Hose 33
Female Ball End Swivel (NPT 86
Female Garden Hose 86
Female GHT Swivel x Female NPT 86
Female GHT x Female GHT 86
Female GHT x Male NPT 86
Female Rigid (GHT x NPT 86
Female Spud - Steam Fitting 78
Fittings for Smooth Bore and Corrugated Hose 24
Flat Flange 82
Flour Hose with Static Wire Hose 14
Fog Water Nozzle 96
Fuel Oil Delivery Hose 33
Full Port Ball Valve 94
Fusible & Frangible Plug 114
Fusible Plug 114

G

Galvanized Carbon Steel Banding 90
Gangways 131
Gas Pump Nozzle 134
Gaskets - Camlock 49
Gate Valve (TTMA x NPT 110
Gate Valve (TTMA x TTMA 110
Gate Valve Handles 110
Gates Mustang Hose 9
Gates Stallion Hose 9

G (con't)

Gear Clamps 93
General Service - Dry Gauge 97
General Service - Dry or Liquid Filled Gauge 97
General Service Air/Water Hose 6
GGP Vapour Recovery Hose 29
Girard 3" Solid Cap 128
Girard 3" Solid Cap BSP Thread 128
Girard 3" Stainless Fusible 128
Girard 3" Stainless Polymer Fusible 128
Goggles 141
Goodyear FabChem Hose 8
Goodyear Hi-Per Hose 10
Goodyear Infinity Hose 30
Goodyear Low Temp Petroleum Tank Truck Hose 30
Goodyear Plicord Artic Extremflex Hose 31
Goodyear Plicord Extremflex Hose 30
Gorrilazorb Floor Dry 139
Gravity Drop Adapters 126
Grey Food Transfer Hose 14
Grooved Pipe Coupling - Flexible 136
Grooved Pipe Coupling - Snap Joint 137
Grounding Studs 127

H

Heavy Duty Absorbent Pads 138
Heavy Duty Clamps 92
Hose Handle 141
Hose Protection Coverings 44
Hose Swivels 135
Hose Tags 142
Hose Washer 96
Hot Air Blower Hose 17
Hot Tar & Asphalt Hose 31
Hydraulic Distributor 114
Hydraulic Pump 98
Hydraulic Pump (Old Design) Parts (HP18951MS) (1st generation 99
Hydraulic Pump Parts - Obsolete (2nd generation 99
Hydraulic Pump Parts (3rd generation 98
Hydraulic Vapour Valve 112
Hydraulic Vapour Valve Parts 113
Hydrolet Valves Parts (Bolted & QRB) 105

I

Inbreathing and Outbreathing Vents 124
Industrial Quick Disonnect Steel Air Couplings - Female Disconnect X Barb Coupler 46
Industrial Quick Disonnect Steel Air Couplings - Female Disconnect X Female NPT 46
Industrial Quick Disonnect Steel Air Couplings - Female Disconnect X Male NPT 46
Industrial Quick Disonnect Steel Air Couplings - Male Disconnect X Barb Coupler 46
Industrial Quick Disonnect Steel Air Couplings - Male Disconnect X Female NPT 46
Industrial Quick Disonnect Steel Air Couplings - Male Disconnect X Male NPT 46
In-Line Sight Glass 127
Internal Chemical Hydraulic Valve 100

J

Jr. Preformed Clamps 91

K

Kamvaloks Dry Break Couplings 74
KanaFlex 100CL Water Suction & Discharge Hose 37
KanaFlex 110CL Water Suction & Discharge Hose 37
KanaFlex 116CL Water Suction & Discharge Hose 37
KanaFlex 180AR Material Hose 19
KanaFlex 180HR Material Hose 19
KanaFlex 200 SFG Food Hose 15
KanaFlex 210 HFG Food Hose 15
KanaFlex 212 MK Food Hose 15
KanaFlex 220RS Water Suction\Discharge & Sewer Hose 38
KanaFlex 300EPDM Water Suction & Discharge Hose 38
KanaFlex ST120DH Hose - Urethane Tube 26
KanaFlex ST120LT Hose - Nitrile Tube 26
KanaFlex ST120LT Banding Sleeve 26
Kanaflex Vapour Recovery Hose 29
Kuritec EGDH Banding Sleeve 27
Kuritec EGDH Hose - Urethane Tube 27

L

L-9 - High Temperature Ducting Hose 43
Lateral WaterBlast Hose 40
Layflat PVC Water Discharge Hose - Blue 35
Layflat PVC Water Discharge Hose - Brown 35
Left Hand Type Power Lock Clamps 89
Light Weight Absorbent Pads 138
Liquid - Petroleum - Vapour Valves 116
Liquid Pressure Relief Valve 128
Liquip API Bottom Loading Coupler 126
Loading Arms 132
Loading Racks 130
Lockable Dust Caps - Domestic 52
Lockable Dust Caps - Import 56
Locking Cam Arms, Rings, and Pins - Dixon - Domestic 59
Locking Cam Arms, Rings, and Pins - Import 59
Locking Cam Arms, Rings, and Pins - PT - Domestic 59
Lubricated Teflon Rope Packing 133

M

Male Crimp Stem Fitting 79
Male Garden Hose 86
Male GHT x Male GHT 86
Male GHT x Male NPT 86
Male Inserts (NPT) 86
Male Spud 78
Marine Exhaust - Hardwall Hose 39
Marine Exhaust - Softwall Hose 39
Morris Compression Couplings 87

N

Nitrile-Coated Cotton Gloves....140
Nozzle Accessories....135

O

Oetiker Clamps....93
Oetiker Pincers....93
OHS Corrugated UHMW Hose....8
OHS Dry Material Hose - Softwall....18
OHS VAC Tank Suction Hose....31
OPW 1004D4 API Bottom Loading Coupler....126
Orange Sewer Flushing Hose....40
Oroflex Layflat 10 Hose....35
Oroflex Layflat 20 Hose....35

P

Parker BlueThunder Hose....9
PeraFlex ARPE Petroleum Composite Hose....27
PeraFlex CGA Gas Hose - Composite....12
PeraFlex GGP Hydro Carbon Hose....10
PeraFlex PGP Standard Chemical Hose....11
PeraFlex SGP Standard Chemical Hose....12
PeraFlex SGT Aggressive Chemical Hose....11
PeraFlex SSP Standard Chemical Hose....12
PeraFlex SST Aggressive Chemical Hose....11
Pink Teflon Tape....133
Pipe Coupling - Aluminum....137
Pipe Coupling - Plastic....137
Pistol Grip Blow Gun....47
Pistol-Grip Nozzle....96
Plated Hose Mender....85
Plated Steel NPT Ends....84
Pneumatic Conveying System Filter....127
Pneumatic/Sequential Vapour Vent....124
Polypropylene Pipe Fitting - Close Nipple....69
Polypropylene Pipe Fitting - Elbow 45°....68
Polypropylene Pipe Fitting - Elbow 90°....68
Polypropylene Pipe Fitting - Half Coupling....68
Polypropylene Pipe Fitting - Nipple....69
Polypropylene Pipe Fitting - Round Cap....68
Polypropylene Pipe Fitting - Coupling....68
Polypropylene Pipe Fitting - Square Plug....68
Polypropylene Pipe Fitting - Street Elbow 45°....68
Polypropylene Pipe Fitting - Street Elbow 90°....68
Polypropylene Pipe Fitting - Tee....68
Polypropylene Pipe Fitting - Union....68
Portable Gangways (PTA....131
Premium Multi Purpose Air/Water Hose....7
Premium Split Leather Gloves....140
Product Tags....142
PVC Sch 80 Pipe Fitting - Close Nipple....73
PVC Sch 80 Pipe Fitting - Coupling....72
PVC Sch 80 Pipe Fitting - Elbow 45°....72
PVC Sch 80 Pipe Fitting - Elbow 90°....72

P (con't)

PVC Sch 80 Pipe Fitting - Nipple 73
PVC Sch 80 Pipe Fitting - Round Cap....72
PVC Sch 80 Pipe Fitting - Square Plug....72
PVC Sch 80 Pipe Fitting - Street Elbow 45°....72
PVC Sch 80 Pipe Fitting - Tee 72
PVC Sch 80 Pipe Fitting - Union....72
PVC Yellow Dipped Gloves 140
Pylons 141

Q

Quick Clean Chemical Hydrolet Valve 104

R

Railroad Tank Car Connections - Style 'T' 61
Railroad Tank Car Gaskets....61
Rainway Clamp....82
Rainway Female Aluminum Ring....82
Rainway Male Aluminum Ring 82
Red Tube Dry Material Handling Hose - Softwall....18
Reducing Couplers x Adapters - Domestic 53
Reducing Couplers x Adapters - Import....57
RFH - General Purpose Ducting Hose 41
RFH-045 - Heavy Duty General Purpose Ducting Hose 42
RFH-W - Wear Strip on RFH Hose 41
RFH-White - Pharmaceutical, Food, FDA Hose....42
Right Hand Type Power Lock Clamps....89
Round Hole Strainer 96
Rubber Water Discharge Hose....36
Rubber Water Suction & Discharge Hose....36

S

Safety Blow Gun....47
Safety Cable.... 141
Safety Lite.... 141
Sand Blast Hose....20
Sanitary Caps 76
Sanitary Clamps 76
Sanitary Ferrules 76
Sanitary Fittings 76
Self-Locking Drop Elbows 119
Side Lever Quick Opening Gate Valve....94
Sliding Gate Valve.... 111
Smoth Bore PTFE Hose 24
Spiral Guard Wrap 44
Spiralite W187 Banding Sleeve....28
Spiralite W187 Hose....28
Spool Adapters - Domestic 53
Spool Adapters - Import 57
Spool Couplers - Domestic 52
Spool Couplers - Import....56
Spring Replacement Kits for Hose Tube Doors.... 127
Square Hole Strainer 96

S (con't)

Stainless Steel Blower Hose R360S Unlined [packed] Hose 17
Stainless Steel Braided Hose 22
Stainless Steel Buckles 90
Stainless Steel Cone Strainer 127
Stainless Steel Mender 85
Standard Ball Valve 94
Standard Quick Opening Gate Valve 94
Standard Utility Nozzles 135
Steam Hose 34
Steel Buckles 90
Stem - Steam Fitting 78
Stretch Straps 141
SuperFlex SF400 Stainless Steel Dry Material Hose 20
SureClean In-line Air Filtration 127
SureClean In-line Air Filtration Cartridge 127
Swing Check Valve Parts 118

T

Tan Bulk Hose - Hardwall 21
Tan Bulk Hose (SBQ Branded) - Hardwall 21
Tank Truck - Heavy Duty 250PSI Petroleum Hose 32
Tank Truck Flange Gaskets (TTMA) 61
Tank Truck Hose - Corrugated Cover 32
Tank Truck Hose - Smooth Cover 32
Teflon Hose - Corrugated 24
TigerFlex 2020 Dry Food Hose 16
TigerFlex TV Banding Sleeve 28
TigerFlex TV Hose 28
TigerFlex WE Heavy Duty Food Hose 16
Tire Inflator Gauge 47
TTMA Flange 77
Tube Doors 127

U

U-9 - High Temperature Ducting Hose 43
UFD - Tough Severe Service Applications Hose 42
Ultraflo 400 Series Butterfly Valve - Black Seat / Carbon Disk 95
Ultraflo 400 Series Butterfly Valve - White Seat / S.S. Disk 95
Unplated Hose Mender 85
Unplated Steel Butt Ends 85
Unplated Steel Grooved Ends 85
Unplated Steel NPT Ends 84
Urethane Tip 82

V

Vactor CS Flange 82
Vacuum Relief Valve - Dual Purpose Vacuum/Pressure Vent 128
Vapour Elbows 122
Vapour Hose Couplers 124
Vent Hood 126
VR6500 Series Vapour Elbow Parts 123

W

WaterBlast Hose 40
Wet-R-Dri Valve - Metering & Locking 109
Wet-R-Dri Valve - Standard & Detent 108
White Food Transfer Hose 14
White Hypalon Cover Gasket 133
White Sanitary Gaskets 76
White Teflon Tape 133
White Washdown Hose 34
Wing Nut - Steam Fitting 78

Terms & Conditions

Minimum Order:	No orders accepted less than $25.00.
Orders:	Acceptance of your orders is an agreement on your part to our sales policies. If there is an error with your order we will contact you with the changes.
Freight:	F.O.B. our warehouse location.
Export Orders:	Domestic freight allowances do not apply to export orders. Our prices are net F.O.B. our plant.
Claims:	No damaged freight claims will be allowed unless reported within 5 days after receipt of merchandise. Shipments travel at buyer's risk unless ordered to be insured.
Proof of Delivery:	For proof of delivery there will be a $10.00 charge for each shipment. This is to cover the cost of the extra service.
Illustrations:	Pictures on this site are intended for a general description only, and, unless specified, do not represent any particular brand.
Price Changes:	Prices are subject to change without notice.
Warranty:	We warranty each new hose and product we manufacture against defects in material and workmanship under normal use and service. Our obligation under this warranty shall be limited to the replacement to the original retail purchaser of any part or parts which, within the period of 90 days from the day of purchase by the purchaser, shall be shown to our satisfaction upon examination, to have become defective due to faulty workmanship or materials at the factory. The warranty does not apply to damage in transit, to alterations or repairs done outside the factory or in unauthorized service stations or damage caused by misuse, negligence or accident, nor does it obligate us to assume any labor charges in connection with the replacement of parts claimed to be defective.
Returns:	No returns will be accepted unless authorized in writing. When so authorized, return via most economical way. All returned merchandise will be closely inspected and credit issued where defect is in workmanship or material. Failure due to mis-application or negligence are solely the responsibility of the user and not subject to credit allowances. Credit will be issued only on our material actually returned.

HEAD OFFICE
7245 Pacific Circle, Mississauga, ON L5T 1V1
Tel: 905-670-0113 Fax: 905-670-4958 Toll Free 1-877-668-4673

CORUNNA
480 Polymoore Drive, Corunna, ON N0N 1G0
Tel: 519-336-8541 Fax: 519-336-8543 Toll Free 1-866-336-8541

STONEY CREEK
263 Barton St, Unit #19, Stoney Creek, ON L8E 2K4
Tel: 905-662-0276 Fax: 905-662-0542

KINGSTON BRANCH
639 Justus Drive, Kingston, ON K7M 4H5
Tel: 613-549-7316 Fax: 613-549-6214

QUEBEC
1900 Hymus Blvd, Dorval, Quebec H9P 1J7
Tel: 514-685-1266 Fax: 514-685-1606

ATLANTIC
10 Akerley Blvd, Dartmouth, NS B3B 1J4
Tel: 902-465-5220 Fax: 902-466-5296

CURRENT CERTIFICATIONS WE HAVE:
CGA | ISO 9001:2015 | TSSA | NAHAD | CSA | RMA | PEI | CRN | CCHD